Ingersoll Rand

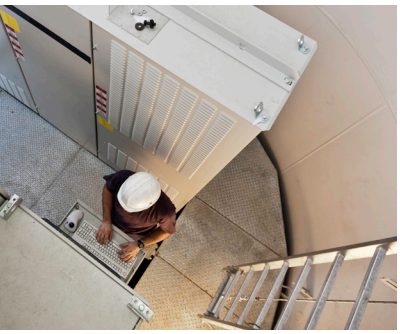






AIR MOTORS

The **Power** you Need in the **Space** you Need it.

INTRODUCTION

For more than 125 years, Ingersoll Rand has been an industry leader in engineering and manufacturing air power. Ingersoll Rand is the expert in air power.

AIR POWER

Creating sheer power from the natural environment, Ingersoll Rand air motors are flexible, efficient alternatives to electric sources–perfect for a wide range of industrial applications. Consider these advantages:

- **Infinitely variable speeds and torques** via pressure regulation or air values–no costly controls required
- **Instant starting, stopping and reversing** eliminates the delays of motor speed-up and slow-down periods
- **Will not overheat or burn out,** even when overloaded or run to stall
- **Safe operations in hazardous conditions,** with no electrical sparks or hydraulic fluids
- **Cool running characteristics minimize** the effects of hot, wet or dusty surroundings
- **Low maintenance,** based on simplicity of design and strength of construction
- **Excellent design flexibility**–a function of compact size, light weight, and high power output
- **Temperature range**–up to 150°F with standard lubrication and up to 300°F with high temperature lubrication

FULL SPECTRUM OF SOLUTIONS

Ingersoll Rand offers well over 200 cataloged models of air motors, with an extensive range of options:

- **Reversible and non-reversible types**
- **Vane or piston configurations**
- **Geared and non-geared varieties**
- **0.10 to 30 horsepower**
- **23 rpm to 26,000 rpm speed ratings**
- **0.10 ft-lb to 1090 ft-lb torque ratings**

In addition, Ingersoll Rand maintains data on hundreds of special application air motors that have solved problems for design engineers around the world over the years. You can access this invaluable resource by contacting your Ingersoll Rand representative or distributor with details of your situation.

With over 125 years of engineering and manufacturing leadership, Ingersoll Rand is the expert in air power.

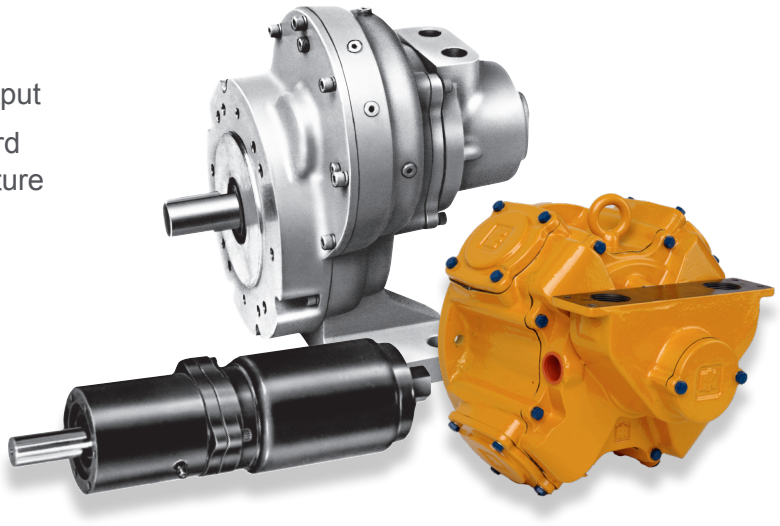

REPAIRS DONE RIGHT.
SERVICE MADE SIMPLE.

Proper service of Ingersoll Rand® air motors with quality-authorized parts will help prevent wear and tear, eliminate downtime and extend a product's life. That's why Ingersoll Rand (IR) has created a program that provides service and repairs to the end user through the use of Authorized Service Agents.

This newly developed program ensures that Ingersoll Rand maintenance and repair standards are met, through the use of genuine parts and service. Whether it's serious technical difficulties or just routine maintenance, products can be taken directly to any specified Authorized Service Agent. From there, the program has been set up to make certain that the air motor is put into the hands of reliable, fully trained IR service technicians. This process ensures that you have access to the expertise and resources of a full service center, regardless of geographic location.







4800 Series Air Motor

PROGRAM FEATURES

- One Face to the End User
- Quality repairs using genuine IR parts
- Access to an IR owned service center
- Fully trained service technicians using IR specified testing equipment
- Receive your quote in 48 hours or less
- 90 day repair warranty

CONTENTS

MULTI-VANE AIR MOTORS 9

M002 Series 9
000-Series 13
M004 Series 15
0-Series with 0-Series Gearing 18
0-Series with 2200 Series Gearing 21
M007 Series 24
2200-Series with Thread-On Gearing 29
2200-Series with Bolt-On Gearing 31
2200-Series with 44-Series Gearing 33
1801 and 1841 Series 35
3800 and 3840 Series 37
44-Series 39
4800 and 4840 Series 41

SPUR GEAR, MULTI-VANE MOTORS 43

17RA, 17RB, 34RA and 34RB Series 44
48RA and 48RB Series 46
92RA and 92RB Series 48
92RM and 992RM Series 50

DIRECT DRIVE MULTI-VANE MOTORS 52

MVA and M0V0 Series 52
Series Select Lube Free 55

ROTARY-VANE PNEUMATIC MILLING AND SAWING MOTORS 62

Overview and Reference Chart 63
000-Series Milling Motors 64
0-Series Milling Motors 66
2200-Series Milling Motors 68
2200-Series Milling Motors (Straddle Mount) 70
2200-Series Milling Motors (Side Mount) 71
44-Series Milling Motors 72

SPECIALLY GOVERNED MOTORS 74

Model 22N51-W/RC 74
Series 551 75

DIRECT AND GEARED DRIVE PISTON AIR MOTORS 76

CC – KK Series 76
MMP150 Series 81
KK5B Series 83

COMPONENTS, EQUIPMENT AND ACCESSORIES 86

Filters, Regulators and Lubricators 88
Accessories 91
Installation of Reversible Models 92
Warranty 93
Index by Model Number 94
Contact Information 101

AIR MOTOR PERFORMANCE CURVES

The performance curves shown throughout this catalog can assist you in matching specific air motor models to requirements. Performance data within one series may vary slightly, depending on gear ratios. When this occurs, median performance for that series is indicated. Follow these guidelines for interpreting the performance curves:

HORSEPOWER

1. Locate operating speed on the correct horizontal axis of the bottom chart

2. Read Horsepower from the correct curve in the bottom chart

TORQUE

1. Locate operating speed on the correct horizontal axis of the bottom chart

2. Read Torque from the correct curve in the bottom chart

AIR CONSUMPTION

1. Locate operating speed on the correct horizontal axis on the bottom chart

2. Read Air Consumption from the correct curve in the top chart

MAXIMUM ALLOWABLE SHAFT RADIAL LOAD

On applications where Shaft Radial Load is a factor:

1. Locate operating speed on the horizontal axis of the top chart

2. Read Shaft Radial Load on the correct Load Curve in the top chart

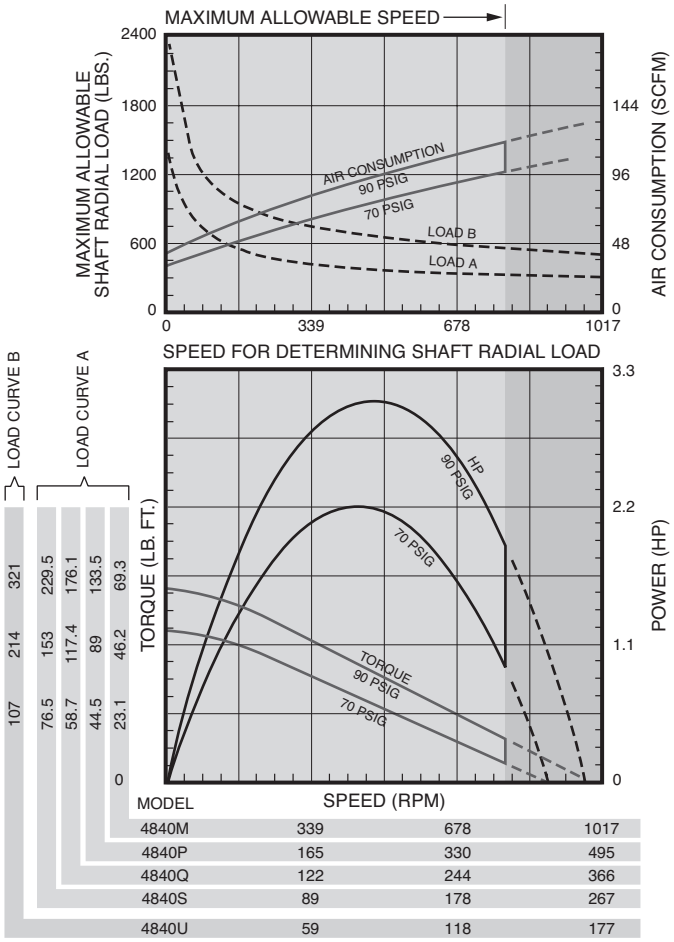

TWO 1/3 HORSEPOWER MOTORS

The Ingersoll Rand reversible Series M004 Air Motor shown weighs only $2^{3}/_{8}$ lbs. It has integral gear reduction of 33 to 1 and a free speed of 450 rpm. The comparable horsepower 110 volt electric motor, with a free speed of 1,725 rpm, weighs $15^{1}/_{2}$ lbs.



AIR MOTOR SELECTION AND CHARACTERISTICS

Ingersoll Rand offers two basic types of Air Motors:

VANE MOTORS

Are smaller, lighter and less expensive than piston motors of similar power. Simple in design and construction, they can be operated in most any position. Vane motors are available in a broad range of speeds, torques and power and are the most widely used type of air motor.

RADIAL PISTON MOTORS

Operate at lower speeds than vane motors. Have excellent starting and speed control. Especially good for “lugging” heavy loads at slow speed. Standard operational position is horizontal.

REVERSIBLE/NON-REVERSIBLE AIR MOTORS

Non-reversible air motors are rated at slightly higher speeds, torques, and horsepowers than reversible motors of the same family.

AIR PRESSURE

When selecting air motors, remember that the specification listings show only one set of performance figures, at a particular pressure —90 psig. Air motors are designed to produce optimum performance at this pressure.

Many other speeds, torques and power can be obtained from the same motor by regulating the pressure, air supply or exhaust. While they will operate at pressures below 40 psig, their performance may not be consistent. They can also be operated above 100 psig, but often at the expense of increased maintenance.

A good rule to follow is to size an air motor based on approximately 70% of the lowest available air pressure. This will allow additional power for starting and possible overloading. See page 8 for performance characteristics at various air pressures.

MAXIMUM POWER

Ungoverned air motors develop maximum horsepower at approximately 50% of free (unloaded) speed while governed motors reach their peak horsepower at about 80% of free speed. The only governed motors in this catalog are the 22 and 55 Series.

DESIRED OPERATING SPEED

The desired operating speed, not the free and unloaded speed should be considered when selecting air motors.

Ungoverned air motors should not be run unloaded. The performance curves in this catalog indicate the maximum speeds at which the motor should be operated. The nameplate stamped speed is present for identification only.

REQUIRED TORQUE

Equally important as the speed at which an air motor is to be run is the required torque. The combination of the two factors—speed and torque—determine the power of the desired motor. Care should be taken to differentiate between stall (maximum) and running torques when selecting air motors.

SPEED AND TORQUE

Starting torques are approximately 75% of stall torques.

Operating or running torques at any speed can be approximated from motor performance curves—or calculated using the formula:

$$\text{Torque (lb-ft)} = \frac{\text{Horsepower x 5,250}}{\text{Speed (revolutions per minute)}}$$

$$\text{Torque (Nm)} = \frac{\text{Kilowatts x 9,550}}{\text{Speed (revolutions per minute)}}$$

SPEED AND TORQUE

When an air motor is to be used with a pulley, sprocket, or gear on the shaft, the overhung load (perpendicular to the shaft), commonly called “shaft radial loading” must be considered. It is shown in the performance curves and is generally assumed to be applied at the mid-point of the keyway of the shaft.

AIR SYSTEM AND SUPPLY

Once an air motor has been selected, it is important to ensure that the desired air pressure is available at the motor, *while the motor is operating*. A pressure reading at the compressor does not mean that the same pressure will be available to an operating air motor, because of possible restrictions and friction losses in the air system. Exhaust restrictions can also affect air motor operation, and are often the cause of performance problems.

INLET CONTROLS

When installing reversible air motors, a four-way valve or two three-way valves should be used to prevent blockage of the secondary Exhaust Port. This is the opposite Rotation Port to that which is being pressurized.

REPLACING ELECTRIC MOTORS WITH AIR MOTORS

Electric motors, with the exception of series wound direct current motors, have entirely different performance characteristics than air motors. Therefore, their torque and speed curves will not match. Many electric motors are oversized to allow for overloading and lower power air motors can be used as replacements.

INGERSOLL RAND ASSISTANCE

Your Ingersoll Rand Air Motor distributor and factory representative are anxious to help with motor problems, applications and selections.

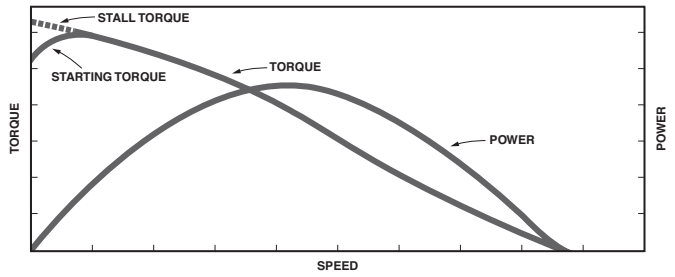

Fig. 1 Torque and power curves for a typical air motor. Torque is maximum at zero speed and zero at free speed. Any loading will slow the motor. As the load increases, the speed decreases and the torque increases until the motor stalls. If the load is decreased, the motor speed increases and its torque output decreases to match the applied load.

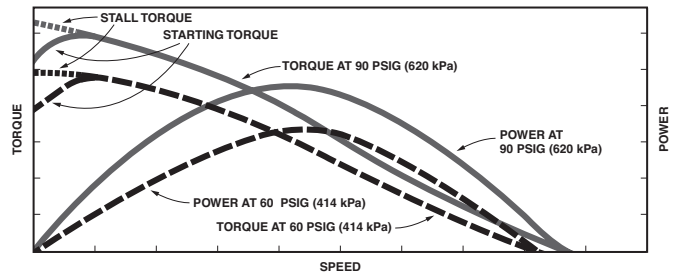

Fig. 2 Typical Air Motor torque and power curves at two different air pressures. Note that speed, torque and power decrease as the air pressure decreases.

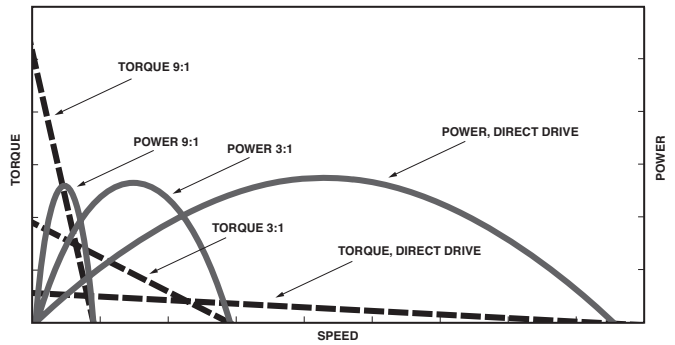

Fig. 3 Torque and power curves for geared and nongeared motors. Note that reducing rpm by gearing steepens the torque curve while maintaining power. Gearing is often used to reduce the speed and increase the torque of air motors. The greater the gear reduction, the steeper will be the torque curve; thus, the higher speed motor will be more susceptible to a drop in speed as a load is applied than the slower speed motor with additional gearing.

VARYING AIR PRESSURE

How to Determine Performance Characteristics at Air Pressures Other than 90 psig

As air pressure changes, the performance characteristics will change by the percentages given below.

UNGOVERNED AIR MOTORS

Air Pressure (psig)	Free Speed (rpm)	Air Consumption at Free Speed (scfm)	Maximum Power (hp)	Speed at Maximum Horsepower (rpm)	Torque at Maximum Horsepower (lb-ft)	Air Consumption at Max. Power (scfm)	Stall or Starting Torque (lb-ft)
40	80%	45%	30%	80%	37.5%	45%	45%
50	84%	56%	44%	84%	52.4%	56%	56%
60	88%	67%	58%	88%	65.9%	67%	67%
70	92%	78%	72%	92%	78.3%	78%	78%
80	96%	89%	86%	96%	89.6%	89%	89%
90	100%	100%	100%	100%	100.0%	100%	100%
100	104%	111%	114%	104%	109.6%	111%	111%

Example: Knowing the performance characteristics of a Model 3840P reversible ungoverned Air Motor at 90 psig (620 kPa) it is a simple matter to determine its characteristics at another air pressure. Using the percentages from the table for 60 psig (414 kPa), the performance becomes:

CHARACTERISTICS

	Performance at 90 psig		Percentage Reduction		Performance at 60 psig
Maximum Power (hp)	1.35	x	58%	=	0.78
Free Speed (rpm)	440	x	88%	=	387
Speed at Max Power (rpm)	215	x	88%	=	189
Max (Stall) Torque (lb-ft)	53.5	x	67%	=	35.8
Torque at Max Power (lb-ft)	33	x	65.9%	=	21.7
Starting Torque (lb-ft)	40	x	67%	=	26.8
Air Consumption at Free Speed (scfm)	54	x	67%	=	36.2
Air Consumption at Max HP (scfm)	44	x	67%	=	29.5

Air Supply or Exhaust Regulation

Reducing or restricting the amount of air supplied to the motor has a similar effect to reducing the air pressure.

Choking or restricting the exhaust has a somewhat different effect, with the speed decreasing much more than the torque.

The effects of changes in pressure, air supply and exhaust regulation are summarized in the table at the right:

Exact variations in performance with “choked” motors are not tabulated; however, “on the job” tests will usually produce the desired results; sometimes from a combination of pressure adjustments and inlet and exhaust restrictions.

AIR REGULATION

	Speed	Torque
Reduced air pressure, or restricting volume of air to motor	Reduced	Greatly Reduced
Choking or restricting exhaust	Greatly Reduced	Reduced

IN-LINE PLANETARY GEAR, MULTI–VANE MOTORS

SERIES M002 MULTI–VANE AIR MOTORS
SPECIFICATIONS

Model	Max. Power		Speed at Max. Power	Free Speed ▲	Starting Torque		Stall Torque		Air Consumption at Max. Power		Weight	
	hp	kw	rpm	rpm	lb-ft	Nm	lb-ft	Nm	scfm	m^3/m	lb	kg
NON-REVERSIBLE Direction of rotation is counterclockwise when facing the shaft												
M002RHR000AR3	0.25	0.19	12,250	26,000	0.15	0.20	0.20	0.27	12.0	0.34	1	0.46
M002RHR004AR3	0.22	0.16	3,250	6,920	0.45	0.61	0.61	0.83	11.9	0.34	1	0.46
M002RHR006AR3	0.22	0.16	2,060	4,385	0.72	0.98	0.96	1.30	11.9	0.34	1 1/8	0.49
M002RHR008AR3	0.22	0.16	1,520	3,240	0.98	1.33	1.31	1.78	11.9	0.34	1	0.46
M002RHR013AR3	0.19	0.14	880	1,840	1.36	2.50	1.82	2.47	11.8	0.33	1 1/8	0.50
M002RHR021AR3	0.19	0.14	555	1,165	2.16	2.93	2.88	3.90	11.8	0.33	1 1/8	0.50
M002RHR028AR3	0.19	0.14	410	860	2.92	3.96	3.90	5.29	11.8	0.33	1 1/8	0.50
M002RHR044AR3	0.19	0.14	262	545	4.61	6.25	6.15	8.34	11.8	0.33	1 1/8	0.50
M002RHR101AR3	0.16	0.12	112	228	*8.32	*11.2	*11.1	*15.0	11.7	0.33	1 3/16	0.54
M002RHR159AR3	0.16	0.12	71	145	*13.1	*17.7	*17.5	*23.7	11.7	0.33	1 3/16	0.54
REVERSIBLE												
M002RVR000AR3	0.20	0.15	11,500	23,000	0.13	0.18	0.18	0.24	9.8	0.28	1	0.46
M002RVR004AR3	0.17	0.13	3,045	6,090	0.40	0.54	0.54	0.73	9.7	0.27	1	0.46
M002RVR006AR3	0.17	0.13	1,930	3,860	0.64	0.87	0.86	1.17	9.7	0.27	1 1/8	0.49
M002RVR008AR3	0.17	0.13	1,425	2,850	0.87	1.18	1.16	1.57	9.7	0.27	1	0.46
M002RVR013AR3	0.14	0.10	820	1,645	1.17	1.58	1.56	2.11	9.6	0.27	1 1/8	0.50
M002RVR021AR3	0.14	0.10	520	1,045	1.85	2.51	2.47	3.35	9.6	0.27	1 1/8	0.50
M002RVR028AR3	0.14	0.10	385	770	2.50	3.39	3.34	4.53	9.6	0.27	1 1/8	0.50
M002RVR044AR3	0.14	0.10	240	485	3.96	5.37	5.28	7.16	9.6	0.27	1 1/8	0.50
M002RVR101AR3	0.11	0.08	104	209	*6.78	*9.19	*9.05	*12.2	9.5	0.27	1 3/16	0.54
M002RVR159AR3	0.11	0.08	66	132	*10.7	*14.5	*14.2	*19.3	9.5	0.27	1 3/16	0.54

▲ ALL models must be operated with sufficient load to prevent speed from exceeding maximum allowable speed shown on performance curve.

* Applications with these models must be limited to 12 lb-ft (16.3 Nm) torque.

Performance figures are at 90 psig (620 kPa) air pressure.

SERIES M002 MULTI–VANE AIR MOTORS

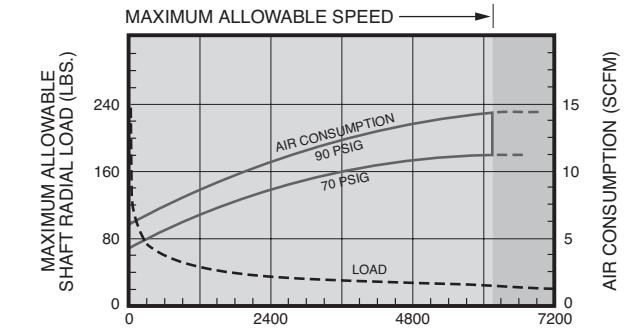

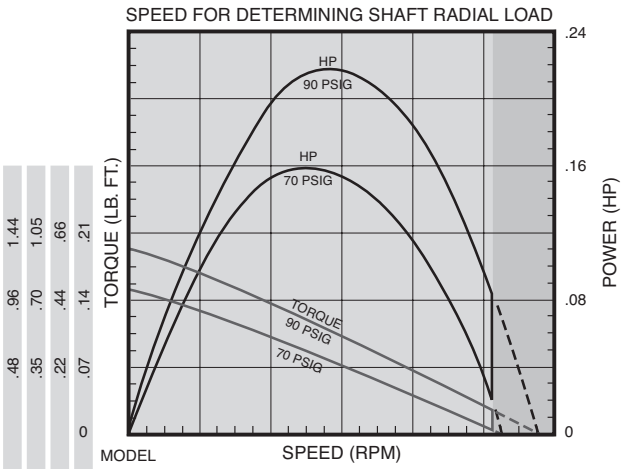

MODEL	SPEED (RPM)		
M002RHR000AR3	9000	18000	27000
M002RHR004AR3	2400	4800	7200
M002RHR006AR3	1520	3040	4560
M002RHR008AR3	1120	2240	3360

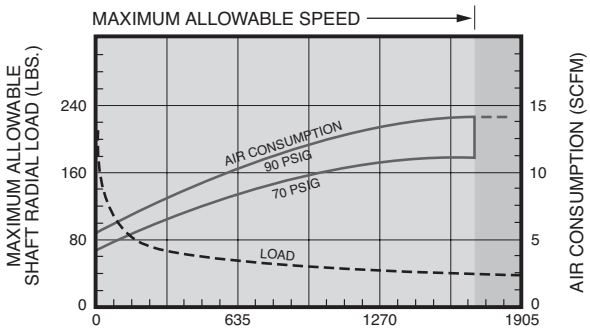

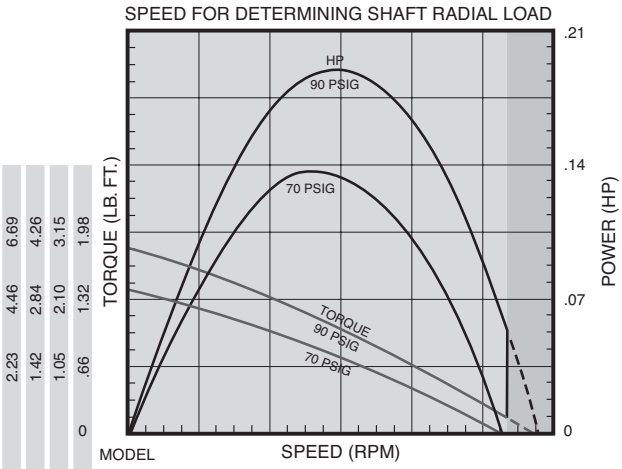

MODEL	SPEED (RPM)		
M002RHR013AR3	635	1270	1905
M002RHR021AR3	400	800	1200
M002RHR028AR3	300	600	900
M002RHR044AR3	185	370	555

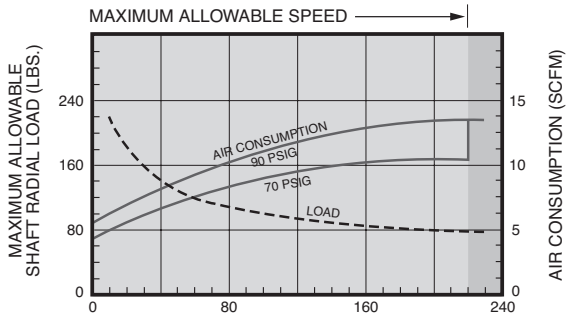

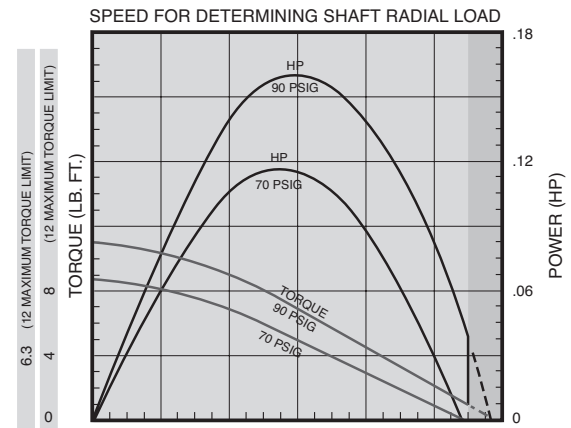

MODEL	SPEED (RPM)		
M002RHR101AR3	80	160	240
M002RHR159AR3	50	100	150

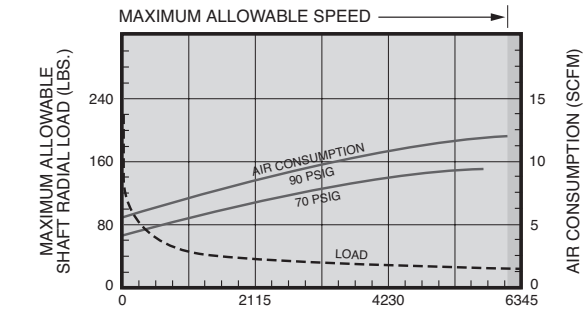

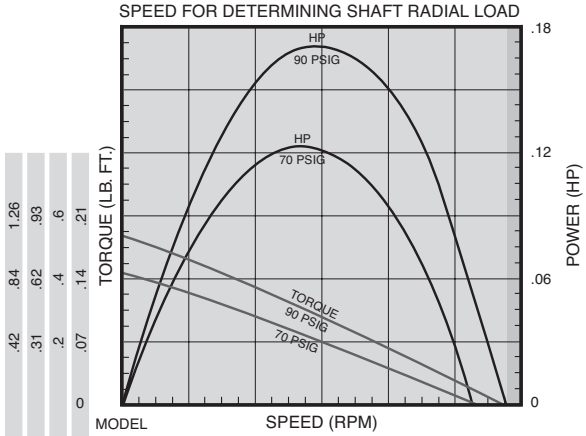

MODEL	SPEED (RPM)		
M002RVR000AR3	8000	16000	24000
M002RVR004AR3	2115	4230	6345
M002RVR006AR3	1340	2680	4020
M002RVR008AR3	990	1980	2970

SERIES M002 MULTI–VANE AIR MOTORS

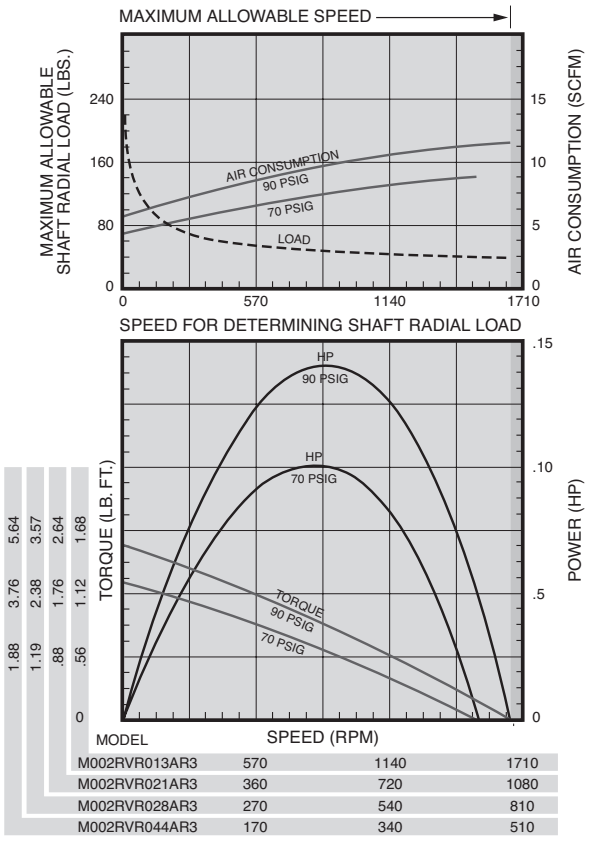

MODEL			
M002RVR013AR3	570	1140	1710
M002RVR021AR3	360	720	1080
M002RVR028AR3	270	540	810
M002RVR044AR3	170	340	510

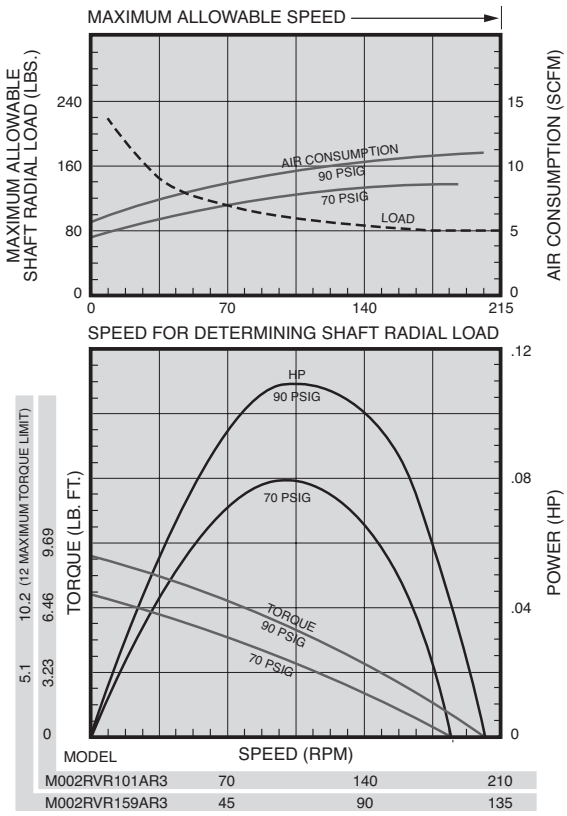

MODEL			
M002RVR101AR3	70	140	210
M002RVR159AR3	45	90	135

SERIES M002 MULTI–VANE AIR MOTORS
DIMENSIONS

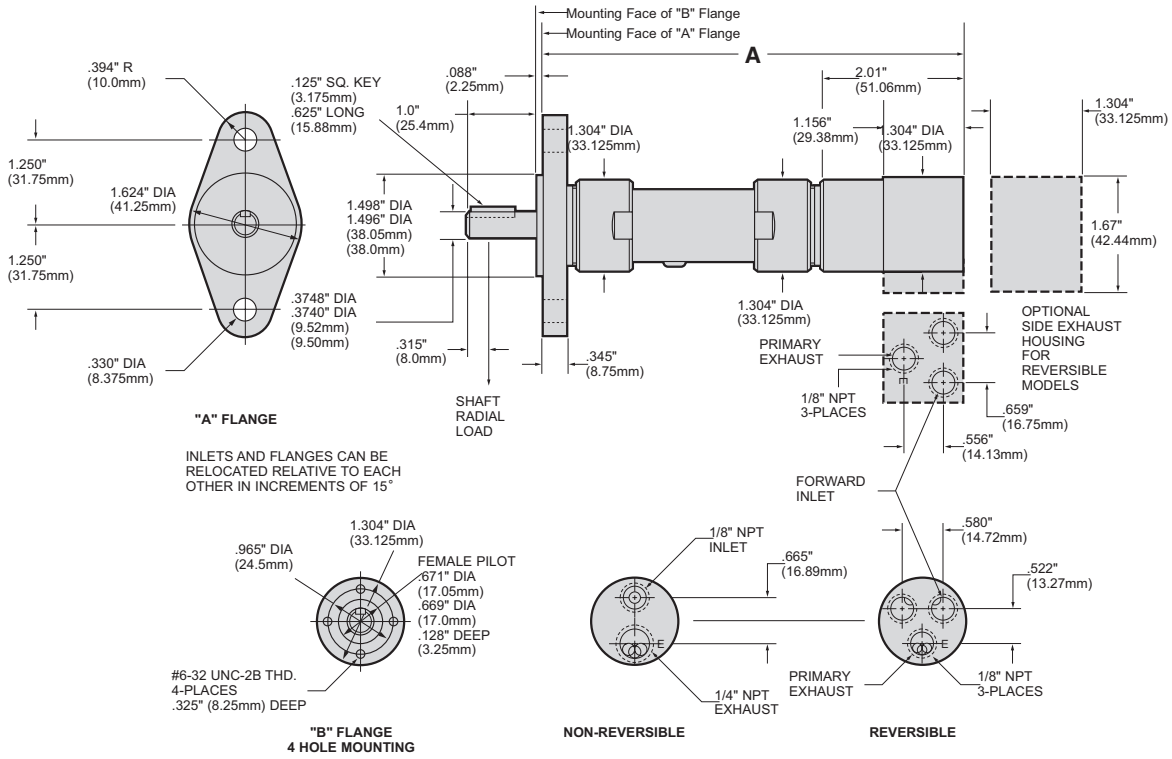

SERIES M002 MODEL NUMBER SYMBOLIZATION

M	002	RV	R	028	A	R3
Motor	HP	Rotation	Air Inlet & Exhaust	Gear Ratio	Flange	Shaft

HP = Approximate horsepower range (.11 to .25)

Rotation = RV Reversible
RH Non-Reversible, Right Hand from Rear of Motor (CCW facing shaft)
LH Non-Reversible, Left Hand from Rear of Motor (CW facing shaft)

Air Inlet & Exhaust = R Rear, S Side (Side Inlet and Exhaust available on Reversible Models only)

Gear Ratio = 028 is 1 to 28, 044 is 1 to 44, etc.

Flange = A 2 Hole Flange, B 4 Hole Face Mounting

Shaft = R3 3/8″ Round Keyed
T3 3/8″-24 UNF-2A Threaded
Threaded Shaft Extension is 1″ (25.4 mm) with
Threaded Length from Shaft End of .87″ (22 mm)
Threaded Shaft Pilot at End is .315″ (8 mm)
Dia. Max. by .374″ (9.5 mm) Long
S3 3/8″ Square Drive
Square Shaft Extension is 1.791″ (45.5 mm)

DIMENSIONS

Gear Ratios (Refer to Model No.)	A	
	in	mm
000, 004, 008	4.989	126.73
006, 013, 021, 028, 044	5.510	139.93
101, 159	6.020	152.91

EQUIPMENT OPTIONS

Furnished with Cataloged Models	Standard Options	Extra Options
2 Hole Flange Mounting	4 Hole Face Mounting	R1440-212-1 3⁄8″ Square Drive Adapter, 1″ long with 3⁄8″-24 Female threads for use with Threaded Shaft Required for 3⁄8″ Adapter (2) 4UA9-561 set screws (1) 8U-722 Bail
3⁄8″ Round Keyed Shaft	3⁄8″-24 Threaded Shaft	
	Side Inlet and Exhaust Housing (for Reversible Models only)	

Note: On all Series M002, M004, and M007 Air Motors, performance is the same for both directions of rotation. On Non-Reversible models, direction of rotation may be easily changed without the need of additional parts by inverting cylinder.

000–SERIES POWER MOTORS
SPECIFICATIONS



Model	Spindle	R.P.M.		Torque				Air Consumption at Free Speed		Sound Level at Free Speed	Weight		Gear Reduction
		Free Speed	Load Speed at Max. Hp	Stall		Output at Max. Hp							
				lb-ft	Nm	lb-ft	Nm	SCFM	L/s	dB(A)	lbs	kg	
NON-REVERSIBLE - 0.25 HP													
7538-B	3/8″ Keyed	550	325	8.2	11.1	4.0	5.4	18.1	8.5	75	1.82	0.82	Double
7539-B	3/8″ Keyed	900	550	5.0	6.7	2.4	3.2	18.1	8.5	75	1.82	0.82	Double
7540-B	3/8″ Keyed	2,700	1,600	1.75	2.3	0.82	1.1	18.1	8.5	75	1.52	0.68	Single
7541-B	3/8″ Keyed	4,500	2,700	1.05	1.4	0.49	0.66	18.1	8.5	75	1.52	0.68	Single
7542-C	3/8″ Keyed	20,000	12,000	0.22	0.3	0.11	0.14	18.1	8.5	75	1.52	0.68	Single
7533-B	3/8″-24 Th'd.	550	325	8.2	11.1	4.0	5.4	18.1	8.5	75	1.82	0.82	Double
7534-B	3/8″-24 Th'd.	900	550	5.0	6.7	2.4	3.2	18.1	8.5	75	1.82	0.82	Double
7535-C	3/8″-24 Th'd.	2,700	1,600	1.75	2.3	0.82	1.1	18.1	8.5	75	1.52	0.68	Single
7536-B	3/8″-24 Th'd.	4,500	2,700	1.05	1.4	0.49	0.66	18.1	8.5	75	1.52	0.68	Single
7537-C	3/8″-24 Th'd.	20,000	12,000	0.22	0.3	0.11	0.14	18.1	8.5	75	1.52	0.68	Single
REVERSIBLE - 0.25 HP													
7543-B	3/8″ Keyed	550	300	7.80	10.6	4.37	5.9	20.0	9.4	75*	1.82	0.82	Double
7544-B	3/8″ Keyed	900	550	4.75	6.4	2.62	3.5	20.0	9.4	75*	1.82	0.82	Double
7545-B	3/8″ Keyed	2,700	1,500	1.60	2.2	0.87	1.1	20.0	9.4	75*	1.52	0.68	Single
7546-B	3/8″ Keyed	4,500	2,400	0.98	1.3	0.55	0.7	20.0	9.4	75*	1.52	0.68	Single
7547-C	3/8″ Keyed	20,000	11,000	0.22	0.3	0.12	0.16	20.0	9.4	75*	1.52	0.68	Single

*Requires installation for reversible motors - shown on page 92.

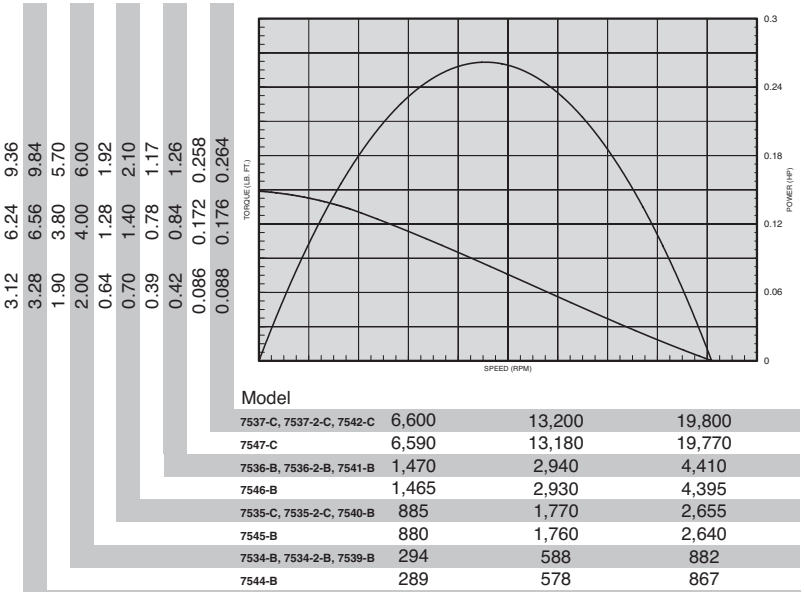

Model			
7537-C, 7537-2-C, 7542-C	6,600	13,200	19,800
7547-C	6,590	13,180	19,770
7536-B, 7536-2-B, 7541-B	1,470	2,940	4,410
7546-B	1,465	2,930	4,395
7535-C, 7535-2-C, 7540-B	885	1,770	2,655
7545-B	880	1,760	2,640
7534-B, 7534-2-B, 7539-B	294	588	882
7544-B	289	578	867

STANDARD EQUIPMENT

Steel motor housing, flush-type grease fittings at rotation points for gear and bearing lubrication, exhaust manifold and muffler.

000–SERIES POWER MOTORS AND MOUNTING ACCESSORIES

DIMENSIONS

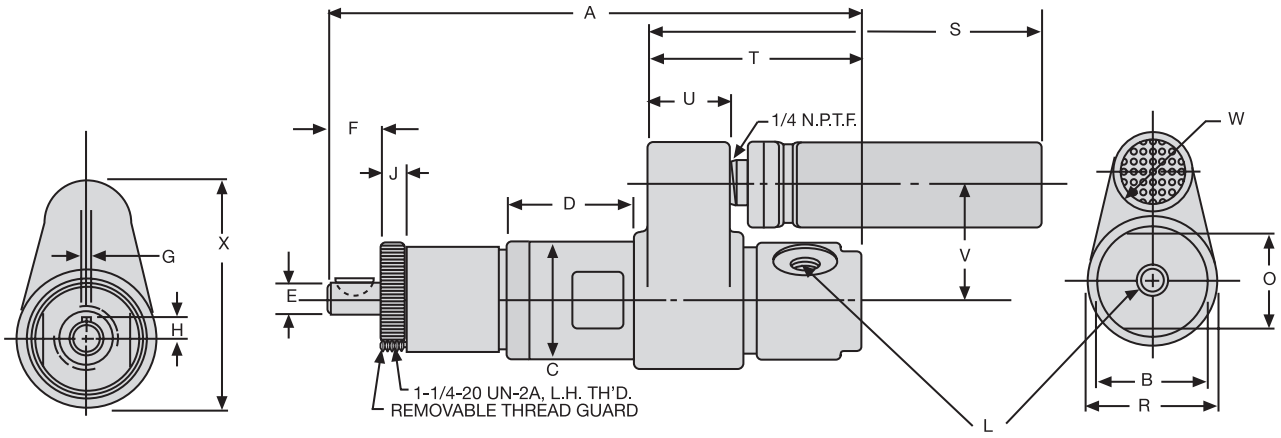

FORWARD ROTATION, DOUBLE REDUCTION SHOWN

Gear Reduction	Dimension A
Single	$4^{15}/_{16}$ 125 mm
Double	6 152 mm

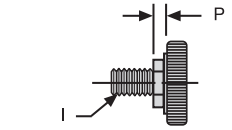

THREADED SPINDLE

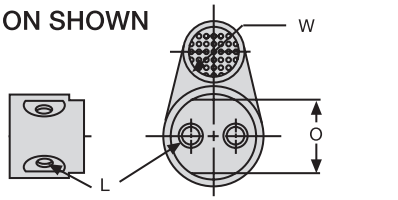

AIR INLETS, REVERSIBLE MOTORS

Scale	B	C	D	E	F	G	H	I	J	L
in	$1^{3}/_{8}$	1.373 1.375	$1^{9}/_{32}$	0.3748 0.3751	0.592 0.643	0.0938 0.0948	0.228 0.238	3/8″-24 UNF-3A Thread	0.251 0.276	1/8″ NPTF Air Inlet
mm	35	34.87 34.93	32	9.52 9.53	15.04 16.33	2.38 2.41	5.79 6.05		6.38 7.01	

Scale	O	P	R	S	T	U	V	W	X
in	$1^{1}/_{8}$ Rev. $1^{3}/_{16}$	0.086 0.139	$1^{5}/_{8}$	$4^{9}/_{16}$	$2^{15}/_{32}$	31/32	$1^{3}/_{8}$	1	$2^{11}/_{16}$
mm	28 Rev. 30	2.18 3.53	41	116	63	25	35	25	68

SERIES M004 MULTI–VANE AIR MOTORS
SPECIFICATIONS



Model	Max. Power		Speed at Max. Power	Free Speed ▲	Starting Torque		Stall Torque		Air Consumption at Max. Power		Weight	
	hp	kw	rpm	rpm	lb-ft	Nm	lb-ft	Nm	scfm	m^3/m	lb	kg
NON-REVERSIBLE Direction of rotation is counterclockwise when facing the shaft												
M004RHR000AR3	0.50	0.37	10,000	18,000	0.40	0.54	0.53	0.72	20.0	0.57	2 1/16	0.95
M004RHR004AR3	0.47	0.35	2,470	4,450	1.46	1.98	1.94	2.63	19.5	0.55	2 3/16	1.00
M004RHR006AR3	0.47	0.35	1,490	2,680	2.42	3.28	3.22	4.37	19.5	0.55	2 3/16	1.00
M004RHR011AR3	0.44	0.33	825	1,490	3.92	5.32	5.22	7.08	19.0	0.54	2 3/8	1.09
M004RHR015AR3	0.44	0.33	610	1,095	5.32	7.21	7.10	9.63	19.0	0.54	2 3/8	1.09
M004RHR023AR3	0.44	0.33	395	715	8.10	11.0	10.8	14.6	19.0	0.54	2 3/8	1.09
M004RHR033AR3	0.44	0.33	280	505	11.5	15.6	15.4	20.8	19.0	0.54	2 3/8	1.09
M004RHR050AR3	0.41	0.31	175	315	*16.5	*22.4	*22.1	*30.0	18.5	0.52	2 11/16	1.22
M004RHR083AR3	0.41	0.31	106	190	*27.5	*37.3	*36.7	*49.7	18.5	0.52	2 11/16	1.22
M004RHR167AR3	0.41	0.31	53	95	*55.0	*74.5	*73.3	*99.4	18.5	0.52	2 11/16	1.22
REVERSIBLE												
M004RVR000AR3	0.40	0.30	8,000	16,000	0.32	0.43	0.42	0.57	19.0	0.54	2 1/16	0.95
M004RVR004AR3	0.37	0.28	1,975	3,955	1.13	1.53	1.51	2.05	18.5	0.52	2 3/16	1.00
M004RVR006AR3	0.37	0.28	1,190	2,380	1.88	2.55	2.51	3.40	18.5	0.52	2 3/16	1.00
M004RVR011AR3	0.34	0.25	660	1,325	3.00	4.07	4.00	5.42	18.0	0.51	2 3/8	1.09
M004RVR015AR3	0.34	0.25	485	975	4.07	5.52	5.43	7.36	18.0	0.51	2 3/8	1.09
M004RVR023AR3	0.34	0.25	315	635	6.23	8.45	8.30	11.2	18.0	0.51	2 3/8	1.09
M004RVR033AR3	0.34	0.25	225	450	8.85	12.0	11.8	16.0	18.0	0.51	2 3/8	1.09
M004RVR050AR3	0.31	0.23	140	280	*12.3	*16.7	*16.5	*22.4	17.5	0.50	2 11/16	1.22
M004RVR083AR3	0.31	0.23	84	169	*20.6	*27.9	*27.5	*37.3	17.5	0.50	2 11/16	1.22
M004RVR167AR3	0.31	0.23	42	85	*41.3	*56.0	*55.0	*74.5	17.5	0.50	2 11/16	1.22

▲ ALL models must be operated with sufficient load to prevent speed from exceeding maximum allowable speed shown on performance curve.
* Applications with these models must be limited to 33 lb-ft (44.7 Nm) torque.
Performance figures are at 90 psig (620 kPa) air pressure.

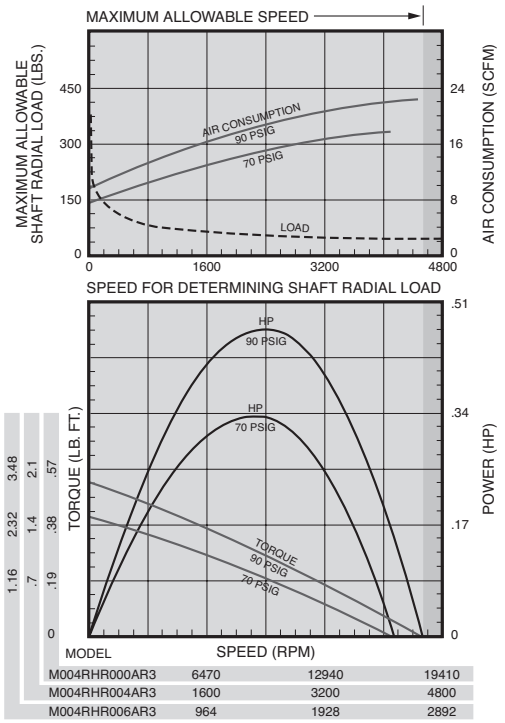

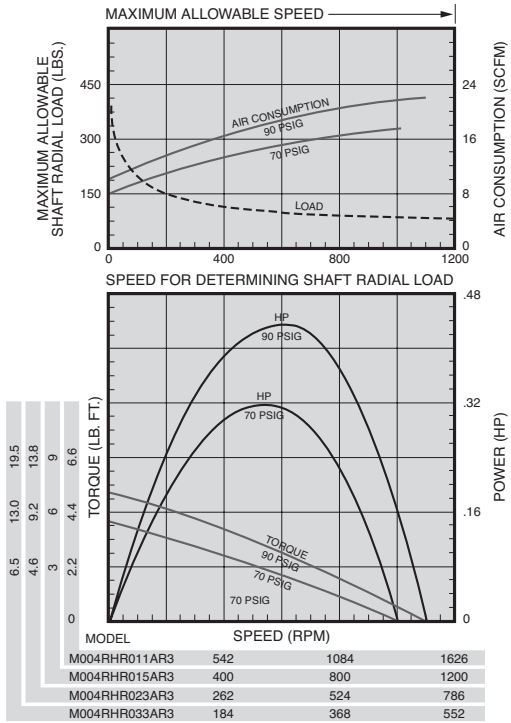

SERIES M004 MULTI–VANE AIR MOTORS

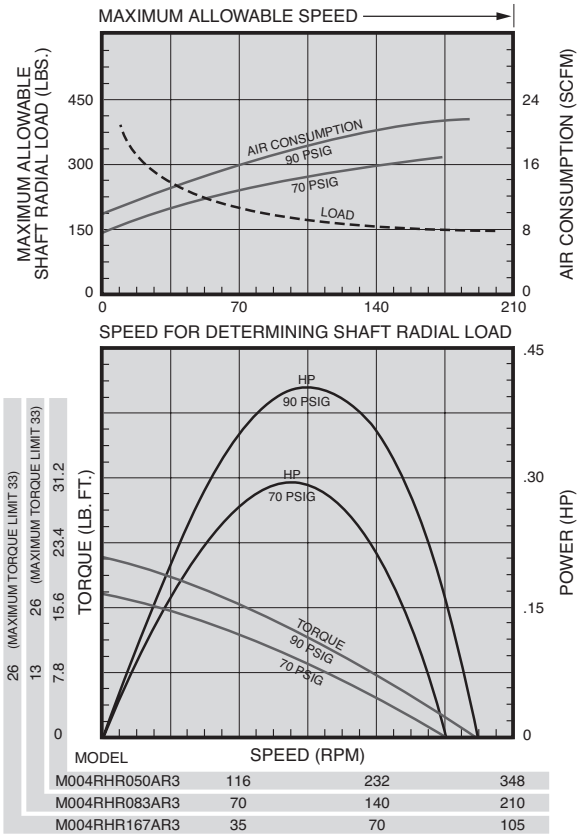

MODEL	SPEED (RPM)		
M004RHR050AR3	116	232	348
M004RHR083AR3	70	140	210
M004RHR167AR3	35	70	105

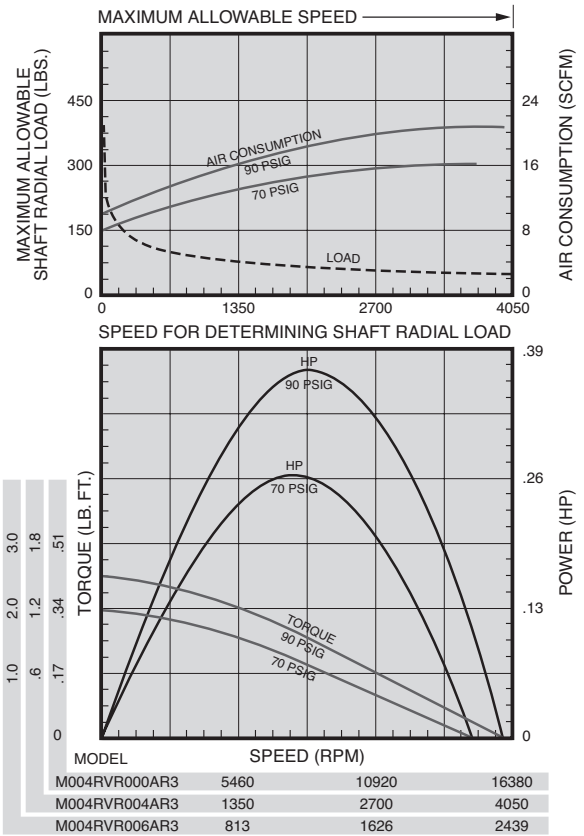

MODEL	SPEED (RPM)		
M004RVR000AR3	5460	10920	16380
M004RVR004AR3	1350	2700	4050
M004RVR006AR3	813	1626	2439

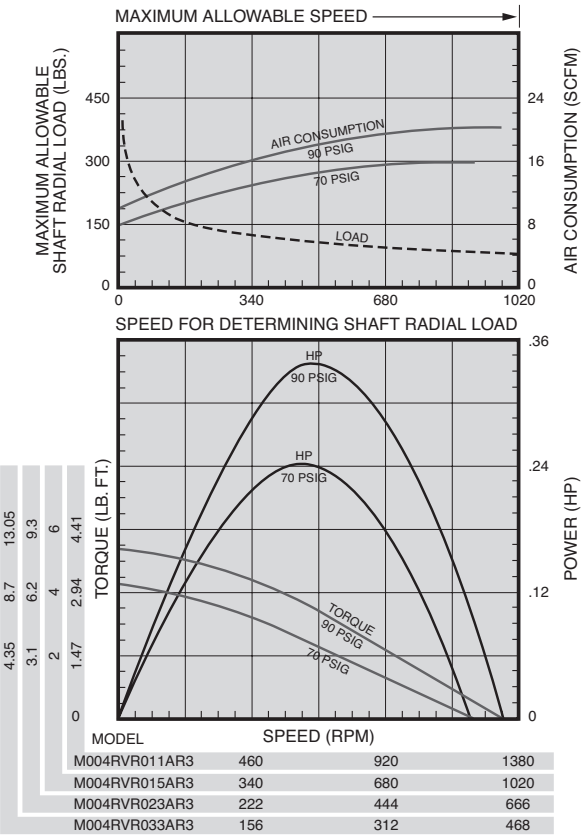

MODEL	SPEED (RPM)		
M004RVR011AR3	460	920	1380
M004RVR015AR3	340	680	1020
M004RVR023AR3	222	444	666
M004RVR033AR3	156	312	468

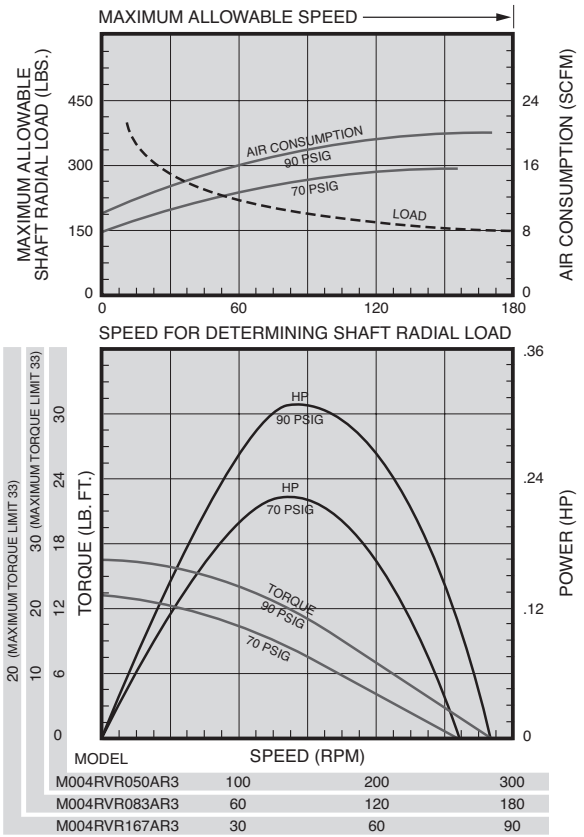

MODEL	SPEED (RPM)		
M004RVR050AR3	100	200	300
M004RVR083AR3	60	120	180
M004RVR167AR3	30	60	90

SERIES M004 MULTI–VANE AIR MOTORS

DIMENSIONS

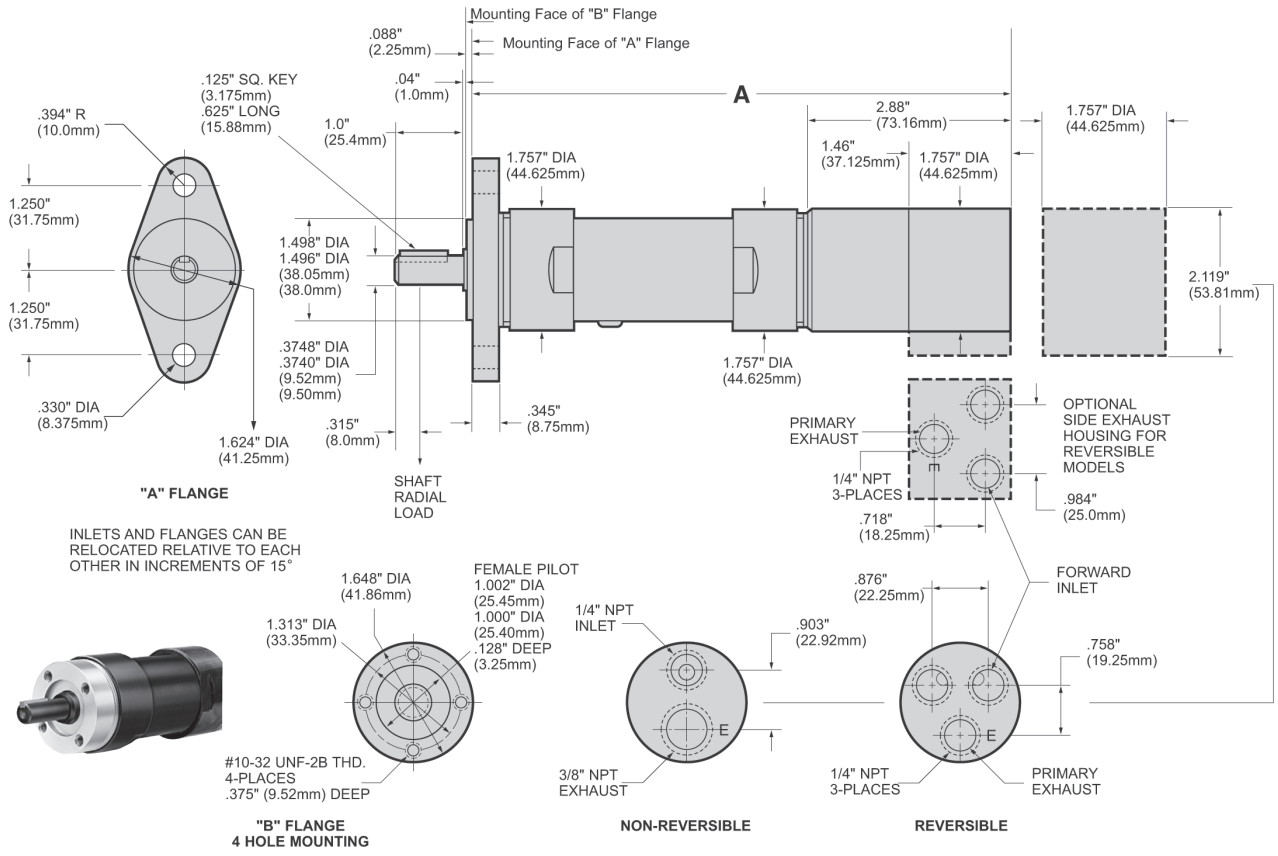

SERIES M004 MODEL NUMBER SYMBOLIZATION

M	004	RV	R	023	A	R3
Motor	HP	Rotation	Air Inlet & Exhaust	Gear Ratio	Flange	Shaft

HP = Approximate horsepower range (.31 to .50)

Rotation = RV Reversible
RH Non-Reversible, Right Hand from Rear of Motor (CCW facing shaft)
LH Non-Reversible, Left Hand from Rear of Motor (CW facing shaft)

Air Inlet & Exhaust = R Rear, S Side (Side Inlet and Exhaust available on Reversible Models only)

Gear Ratio = 023 is 1 to 23, 033 is 1 to 33, etc.

Flange = A 2 Hole Flange, B 4 Hole Face Mounting

Shaft = R3 3/8″ Round Keyed
T3 3/8″-24 UNF-2A Threaded
Threaded Shaft Extension is .512″ (13 mm)
Full Thread Length is .424″ (10.75 mm)
S3 3/8″ Square Drive
Square Shaft Extension is 1.791″ (45.5 mm)

DIMENSIONS

Gear Ratios (Refer to Model No.)	A	
	in	mm
000, 004, 006	6.248	158.69
011, 015, 023, 033	6.984	177.38
050, 083, 167	7.745	196.73

EQUIPMENT OPTIONS

Furnished with Cataloged Models	Standard Options	Extra Options
2 Hole Flange Mounting	4 Hole Face Mounting	R1440-212-1 3/8″ Square Drive Adapter, 1″ long with 3/8″-24 Female threads for use with Threaded Shaft Required for 3/8″ Adapter (2) 4UA9-561 set screws
3/8″ Round Keyed Shaft	3/8″-24 Threaded Shaft Side Inlet and Exhaust Housing (for Reversible Models only)	

Note: On all Series M002, M004, and M007 Air Motors, performance is the same for both directions of rotation. On Non-Reversible models, direction of rotation may be easily changed without the need of additional parts by inverting cylinder. See Assembly Instruction form number listed in price sheet.

0–SERIES POWER MOTORS (WITH 0–SERIES GEARING)
SPECIFICATIONS



Model	Spindle	R.P.M.		Torque				Air Consumption at Free Speed		Sound Level at Free Speed	Weight		Gear Reduction
		Free Speed	Load Speed at Max. Hp	Stall		Output at Max. Hp							
				lb-ft	Nm	lb-ft	Nm	SCFM	L/s	dB(A)	lbs	kg	
NON-REVERSIBLE - 0.60 HP													
8230-1A	3/8″ Keyed	19,000	9,800	0.70	0.9	0.32	0.4	41	19.3	80	2.45	1.10	Single
8230-2A	3/8″ Keyed	5,700	2,900	2.5	2.9	1.10	1.5	41	19.3	80	2.45	1.10	Single
8230-3A	3/8″ Keyed	3,500	1,750	3.50	4.7	1.80	2.4	41	19.3	80	2.45	1.10	Single
8230-4A	3/8″ Keyed	2,800	1,400	4.50	6.1	2.20	3.0	41	19.3	80	2.45	1.10	Single
8230-5A	3/8″ Keyed	1,650	840	7.50	10.2	3.80	5.1	41	19.3	80	2.98	1.34	Double
8230-6A	3/8″ Keyed	1,000	500	12.00	16.3	6.20	8.4	41	19.3	80	2.98	1.34	Double
8230-7A	3/8″ Keyed	800	390	14.80	20.0	8.00	10.8	41	19.3	80	2.98	1.34	Double
8230-8A	3/8″ Keyed	600	315	19.60	26.5	10.00	13.5	41	19.3	80	2.98	1.34	Double
8230-9A	3/8″ Keyed	500	250	24.00	32.5	12.50	16.9	41	19.3	80	2.98	1.34	Double
8229-1A	3/8″-24 Th'd.	19,000	9,800	.70	0.9	0.32	0.4	41	19.3	80	2.45	1.10	Single
8229-2A	3/8″-24 Th'd.	5,700	2,900	2.15	2.9	1.10	1.5	41	19.3	80	2.45	1.10	Single
8229-3A	3/8″-24 Th'd.	3,500	1,750	3.50	4.7	1.80	2.4	41	19.3	80	2.45	1.10	Single
8229-4A	3/8″-24 Th'd.	2,800	1,400	4.50	6.1	2.20	3.0	41	19.3	80	2.45	1.10	Single
8229-5A	3/8″-24 Th'd.	1,650	840	7.50	10.2	3.80	5.1	41	19.3	80	2.98	1.34	Double
8229-6A	3/8″-24 Th'd.	1,000	500	12.00	16.3	6.20	8.4	41	19.3	80	2.98	1.34	Double
8229-7A	3/8″-24 Th'd.	800	390	14.80	20.0	8.00	10.8	41	19.3	80	2.98	1.34	Double
8229-8A	3/8″-24 Th'd.	600	315	19.60	26.5	10.00	13.5	41	19.3	80	2.98	1.34	Double
8229-9A	3/8″-24 Th'd.	500	250	24.00	32.5	12.50	16.9	41	19.3	80	2.98	1.34	Double
REVERSIBLE - 0.50 HP													
8231-1B	3/8″ Keyed	18,000	9,200	0.52	0.7	0.28	0.4	32	15.1	80*	2.45	1.10	Single
8231-2B	3/8″ Keyed	5,300	2,600	1.70	2.3	1.00	1.3	32	15.1	80*	2.45	1.10	Single
8231-3B	3/8″ Keyed	3,200	1,550	2.90	3.9	1.70	2.3	32	15.1	80*	2.45	1.10	Single
8231-4B	3/8″ Keyed	2,600	1,300	3.50	4.7	2.00	2.7	32	15.1	80*	2.45	1.10	Single
8231-5B	3/8″ Keyed	1,500	780	5.90	8.0	3.50	4.7	32	15.1	80*	2.98	1.34	Double
8231-6B	3/8″ Keyed	950	480	9.50	12.9	5.50	7.4	32	15.1	80*	2.98	1.34	Double
8231-7B	3/8″ Keyed	750	380	11.80	16.0	7.00	9.5	32	15.1	80*	2.98	1.34	Double
8231-8B	3/8″ Keyed	575	290	15.50	21.0	9.00	12.2	32	15.1	80*	2.98	1.34	Double
8231-9B	3/8″ Keyed	475	240	19.40	26.2	11.00	14.9	32	15.1	80*	2.98	1.34	Double

* Requires installation for reversible motors - shown on page 92.

0–SERIES POWER MOTORS (WITH 0–SERIES GEARING)

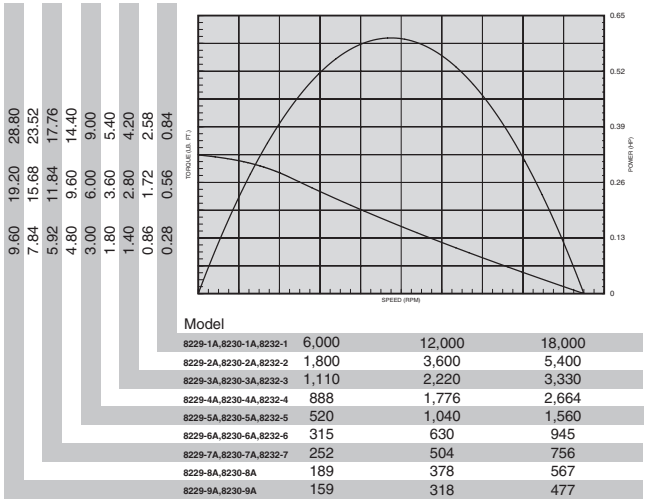

Model			
8229-1A,8230-1A,8232-1	6,000	12,000	18,000
8229-2A,8230-2A,8232-2	1,800	3,600	5,400
8229-3A,8230-3A,8232-3	1,110	2,220	3,330
8229-4A,8230-4A,8232-4	888	1,776	2,664
8229-5A,8230-5A,8232-5	520	1,040	1,560
8229-6A,8230-6A,8232-6	315	630	945
8229-7A,8230-7A,8232-7	252	504	756
8229-8A,8230-8A	189	378	567
8229-9A,8230-9A	159	318	477

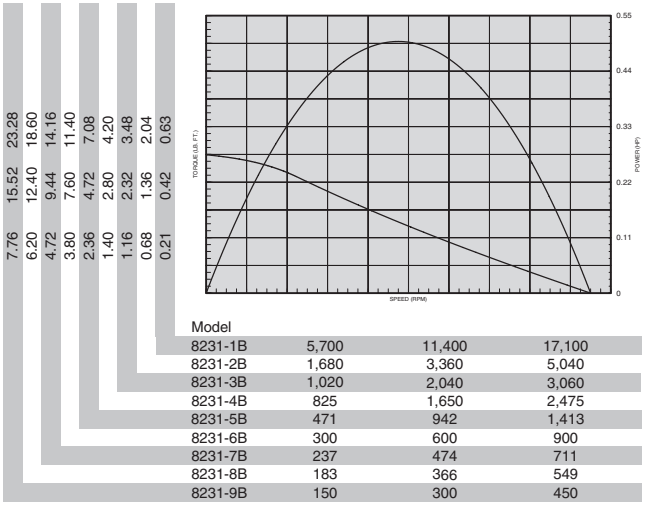

Model			
8231-1B	5,700	11,400	17,100
8231-2B	1,680	3,360	5,040
8231-3B	1,020	2,040	3,060
8231-4B	825	1,650	2,475
8231-5B	471	942	1,413
8231-6B	300	600	900
8231-7B	237	474	711
8231-8B	183	366	549
8231-9B	150	300	450

STANDARD EQUIPMENT

Steel motor housing, flush-type grease fittings at rotation points for gear and bearing lubrication, exhaust manifold rotatable within 360°, and muffler.

0–SERIES POWER MOTORS AND MOUNTING ACCESSORIES

DIMENSIONS

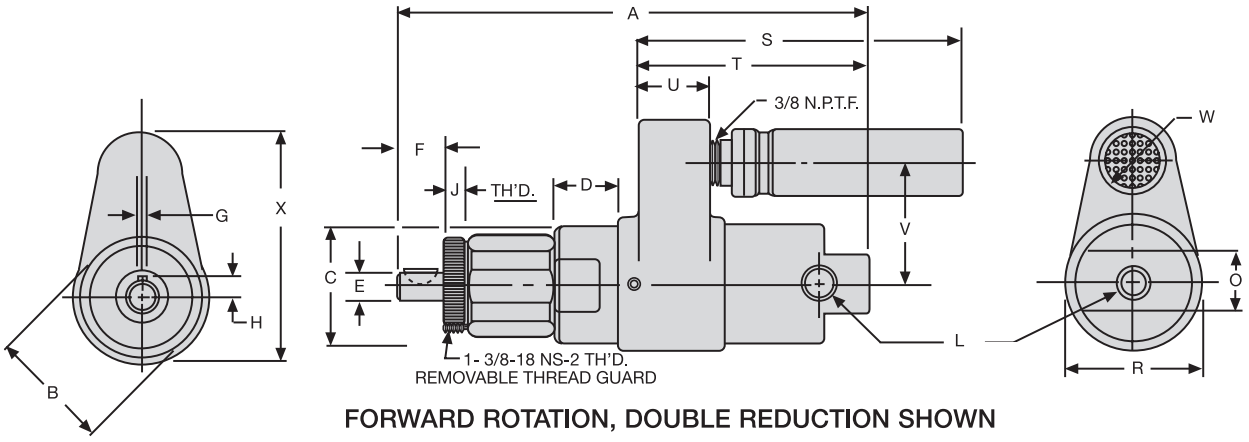

FORWARD ROTATION, DOUBLE REDUCTION SHOWN

Gear Reduction	Dimension A	
	Series 8231	Series 8229-8230
Double	$5^{5}/_{8}$ 143 mm	$5^{3}/_{4}$ 146 mm
Triple	$6^{15}/_{16}$ 176 mm	$7^{1}/_{16}$ 179 mm

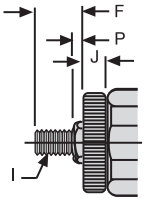

THREADED SPINDLE

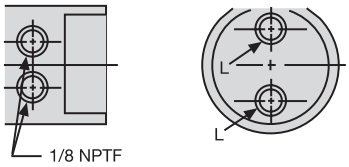

AIR INLETS, REVERSIBLE MOTORS

Scale	B	C	D	E	F	G	H	I	J	L
in	$1^{3}/_{4}$	1.730 1.740	0.960 0.980	0.3748 0.3751	0.688 0.740	0.0938 0.0948	0.228 0.238	3/8″-24 UNF-3A Thread	0.270 0.292	1/4″ Female NPTF Air Inlet
mm	44	43.94 44.20	24.38 24.89	9.52 9.53	17.48 18.80	2.38 2.41	5.79 6.05		6.86 7.42	

Scale	O	P	R	S	T - Forw.	T	U	V	W	X
in	7/8	0.163- 0.203	2	$4^{7}/_{8}$	$3^{13}/_{32}$	$3^{9}/_{32}$	$1^{1}/_{16}$	$1^{13}/_{16}$	1	$3^{7}/_{16}$
mm	22	4.14 5.16	51	124	86	83	27	46	25	87

0–SERIES POWER MOTORS (WITH 2200 SERIES GEARING)
SPECIFICATIONS



Model	Spindle	R.P.M.		Torque				Air Consumption at Free Speed		Sound Level at Free Speed	Weight		Gear Reduction
		Free Speed	Load Speed at Max. Hp	Stall		Output at Max. Hp							
				lb-ft	Nm	lb-ft	Nm	SCFM	L/s	dB(A)	lbs	kg	
NON-REVERSIBLE - 0.60 HP													
8226-6A	1/2″ Keyed	700	350	17.20	23.3	9.00	12.2	40.5	19.1	80	4.25	1.91	Double
8226-7A	1/2″ Keyed	450	225	26.00	35.2	13.70	18.6	40.5	19.1	80	4.25	1.91	Double
8226-8A	1/2″ Keyed	375	185	32.00	43.4	17.00	23.0	40.5	19.1	80	4.25	1.91	Double
8226-10A	1/2″ Keyed	170	87	60.00**	88.1	36.00	48.8	40.5	19.1	80	5.56	2.50	Triple
8226-11A**	1/2″ Keyed	110	57	60.00**	134.1	55.00	74.5	40.5	19.1	80	5.56	2.50	Triple
8226-12A**	1/2″ Keyed	90	45	60.00**	165.3	60.00**	94.8	40.5	19.1	80	5.56	2.50	Triple
8226-13A**	1/2″ Keyed	60	30	60.00**	249.3	60.00**	139.6	40.5	19.1	80	5.56	2.50	Triple
8226-14A**	1/2″ Keyed	50	25	60.00**	306.2	60.00**	169.4	40.5	19.1	80	5.56	2.50	Triple
REVERSIBLE - 0.50 HP													
8228-2B	1/2″ Keyed	3,200	1,550	2.90	3.9	1.70	2.3	30	14	80*	4.25	1.91	Double
8228-3B	1/2″ Keyed	2,600	1,300	3.50	4.7	2.00	2.7	30	14	80*	4.25	1.91	Double
8228-5B	1/2″ Keyed	800	420	11.20	15.2	6.30	8.5	30	14	80*	4.25	1.91	Double
8228-6B	1/2″ Keyed	650	330	13.80	18.7	8.00	10.8	30	14	80*	4.25	1.91	Double
8228-7B	1/2″ Keyed	425	220	20.00	27.1	12.00	16.3	30	14	80*	4.25	1.91	Double
8228-8B	1/2″ Keyed	350	185	25.00	33.9	14.00	19.0	30	14	80*	4.25	1.91	Double
8228-9B	1/2″ Keyed	200	105	45.00	61.0	25.00	33.9	30	14	80*	5.56	2.50	Triple
8228-10B	1/2″ Keyed	160	80	55.00	74.5	33.00	44.7	30	14	80*	5.56	2.50	Triple
8228-11B**	1/2″ Keyed	100	54	60.00**	81.3	48.00	65.0	30	14	80*	5.56	2.50	Triple
8228-12B**	1/2″ Keyed	85	43	60.00**	81.3	60.00**	81.3	30	14	80*	5.56	2.50	Triple
8228-13B**	1/2″ Keyed	50	28	60.00**	81.3	60.00**	81.3	30	14	80*	5.56	2.50	Triple
8228-14B**	1/2″ Keyed	40	22	60.00**	81.3	60.00**	81.3	30	14	80*	5.56	2.50	Triple

* Requires installation for reversible motors - shown on page 92.

** NOTE: Maximum torque recommended for planetary gear system on these models requires shear key with 60 ft/lbs. shear strength.

0–SERIES POWER MOTORS (WITH 2200 SERIES GEARING)

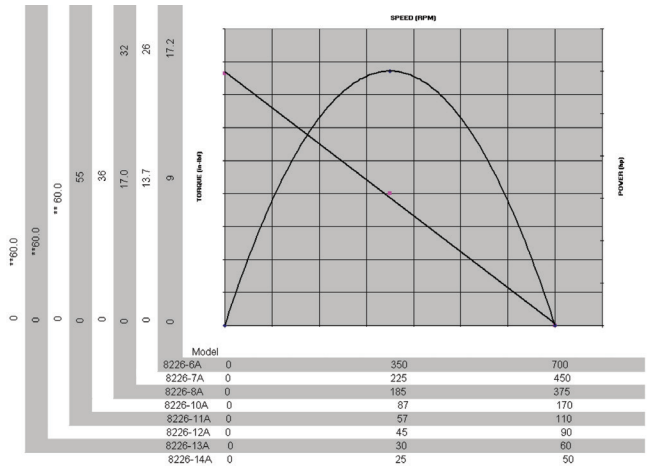

Model			
8226-6A	0	350	700
8226-7A	0	225	450
8226-8A	0	185	375
8226-10A	0	87	170
8226-11A	0	57	110
8226-12A	0	45	90
8226-13A	0	30	60
8226-14A	0	25	50

***Note:** Maximum torque recommended for planetary gear system on these models is 60 ft/lbs

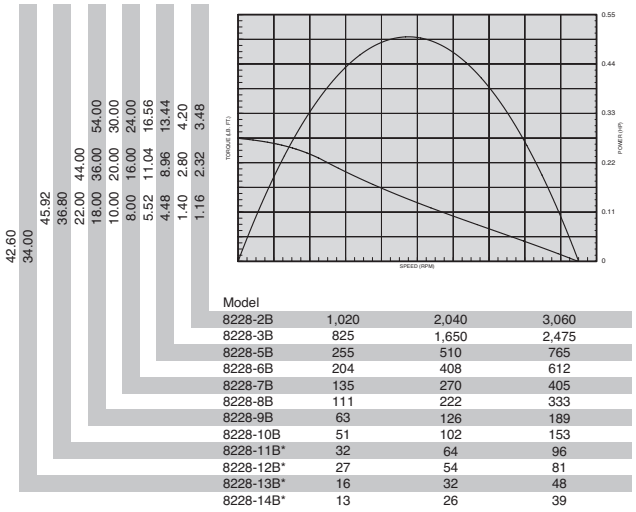

Model			
8228-2B	1,020	2,040	3,060
8228-3B	825	1,650	2,475
8228-5B	255	510	765
8228-6B	204	408	612
8228-7B	135	270	405
8228-8B	111	222	333
8228-9B	63	126	189
8228-10B	51	102	153
8228-11B*	32	64	96
8228-12B*	27	54	81
8228-13B*	16	32	48
8228-14B*	13	26	39

***Note:** Maximum torque recommended for planetary gear system on these models requires shear key with 60 ft/lbs shear strength.

STANDARD EQUIPMENT

Steel motor housing, flush-type grease fittings at rotation points for gear and bearing lubrication,exhaust manifold rotatable within 360°, and muffler.

0/2200 SERIES POWER MOTORS AND MOUNTING ACCESSORIES

DIMENSIONS

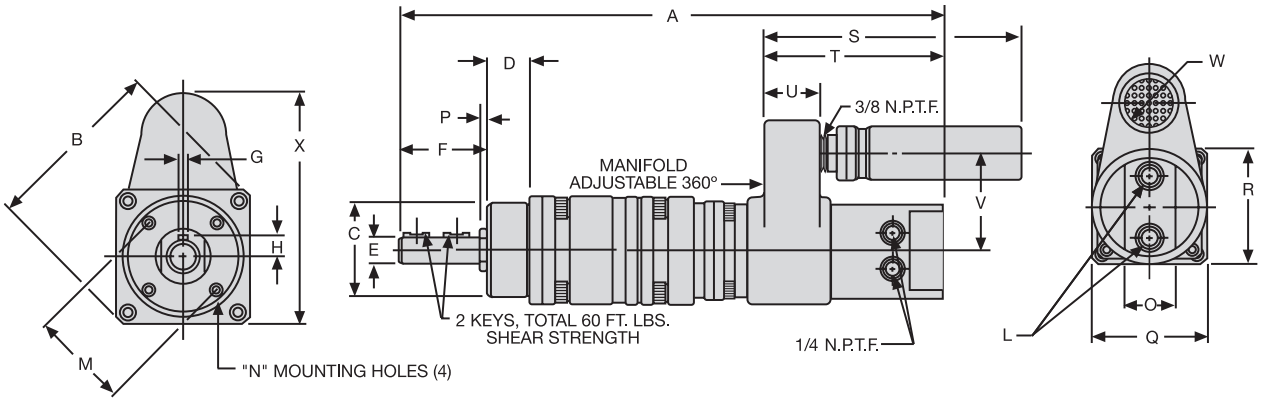

REVERSIBLE ROTATION, TRIPLE REDUCTION SHOWN

Gear Reduction	Dimension A	
	Series 8226	Series 8228
Double	$8^{11}/_{16}$ 221 mm	$8^{9}/_{16}$ 217 mm
Triple	$10^{1}/_{2}$ 267 mm	$10^{3}/_{8}$ 264 mm

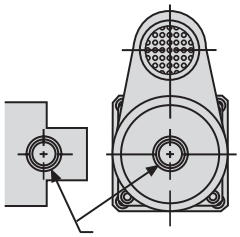

AIR INLETS, SINGLE-DIRECTION MOTORS

Scale	B	C	D	E	F	G	H	I	J	L
in	$2^{11}/_{16}$	1.7490 1.7495	0.774 0.818	0.4990 0.4995	1.604 1.655	0.125 0.126	0.299 0.309	1/4 NPTF Air Inlet	1.432 1.442	10-24 UNC-2B Thread
mm	68	44.42 44.44	19.66 20.78	12.67 12.69	40.74 42.04	3.18 3.20	7.72 7.98		36.37 36.63	

Scale	O	P	Q	R	S	T - Forw. Rotation	T Reversible	U	V	W	X
in	7/8	0.098 0.164	2	2	$4^{7}/_{8}$	$3^{13}/_{32}$	$3^{9}/_{32}$	$1^{1}/_{16}$	$1^{13}/_{16}$	1	$3^{7}/_{16}$
mm	22	2.49 4.17	51	51	124	86	83	27	46	25	87

SERIES M007 MULTI–VANE AIR MOTORS
SPECIFICATIONS



Model	Max. Power		Speed at Max. Power	Free Speed ▲	Starting Torque		Stall Torque		Air Consumption at Max. Power		Weight	
	hp	kw	rpm	rpm	lb-ft	Nm	lb-ft	Nm	scfm	m^3/m	lb	kg
NON-REVERSIBLE Direction of rotation is counterclockwise when facing the shaft												
M007RHR000AR4	0.85	0.63	11,000	22,000	0.58	0.79	0.77	1.04	36	1.02	3 1/16	1.4
M007RHR004AR4	0.82	0.61	2,445	4,890	2.39	3.24	3.19	4.33	36	1.02	3 1/16	1.4
M007RHR006AR4	0.82	0.61	1,675	3,350	3.50	4.75	4.66	6.32	36	1.02	3 1/16	1.4
M007RHR009AR4	0.82	0.61	1,230	2,460	4.76	6.45	6.34	8.60	36	1.02	3 1/16	1.4
M007RHR012AR4	0.79	0.59	870	1,740	6.19	8.39	8.25	11.2	36	1.02	3 1/2	1.6
M007RHR015AR4	0.79	0.59	685	1,370	7.80	10.6	10.4	14.1	36	1.02	3 1/2	1.6
M007RHR021AR4	0.79	0.59	470	940	11.5	15.6	15.3	20.7	36	1.02	3 1/2	1.6
M007RHR027AR4	0.79	0.59	370	740	14.5	19.7	19.3	26.2	36	1.02	3 1/2	1.6
M007RHR037AR4	0.79	0.59	270	540	19.7	26.7	26.3	35.7	36	1.02	3 1/2	1.6
M007RHR044AR4	0.79	0.59	232	465	23.2	31.5	30.9	41.9	36	1.02	3 1/2	1.6
M007RHR063BR6	0.79	0.59	161	321	33.5	45.4	44.7	60.6	36	1.02	7 1/8	3.2
M007RHR086BR6	0.79	0.59	118	236	45.7	62.0	60.9	82.6	36	1.02	7 1/8	3.2
M007RHR119BR6	0.76	0.57	82	163	60.5	82.0	80.7	109.0	36	1.02	7 3/8	3.4
M007RHR151BR6	0.76	0.57	65	129	76.5	104.0	102.0	138.0	36	1.02	7 3/8	3.4
M007RHR188BR6	0.76	0.57	52	103	96.0	130.0	128.0	174.0	36	1.02	7 3/8	3.4
M007RHR275BR6	0.76	0.57	35	70	*140.0	*190.0	*187.0	*254.0	36	1.02	7 3/8	3.4
M007RHR374BR6	0.76	0.57	26	52	*191.0	*259.0	*254.0	*344.0	36	1.02	7 3/8	3.4
REVERSIBLE												
M007RVR000AR4	0.70	0.52	10,000	20,000	0.47	0.64	0.63	0.85	33	0.93	3 1/16	1.4
M007RVR004AR4	0.67	0.50	2,225	4,450	1.94	2.63	2.59	3.51	33	0.93	3 1/16	1.4
M007RVR006AR4	0.67	0.50	1,520	3,045	2.84	3.85	3.78	5.13	33	0.93	3 1/16	1.4
M007RVR009AR4	0.67	0.50	1,120	2,240	3.86	5.23	5.14	6.97	33	0.93	3 1/16	1.4
M007RVR012AR4	0.64	0.48	790	1,580	4.97	6.74	6.63	8.99	33	0.93	3 1/2	1.6
M007RVR015AR4	0.64	0.48	625	1,250	6.29	8.53	8.38	11.4	33	0.93	3 1/2	1.6
M007RVR021AR4	0.64	0.48	425	855	9.2	12.5	12.2	16.5	33	0.93	3 1/2	1.6
M007RVR027AR4	0.64	0.48	335	675	11.6	15.7	15.5	20.1	33	0.93	3 1/2	1.6
M007RVR037AR4	0.64	0.48	245	495	15.8	21.4	21.1	28.6	33	0.93	3 1/2	1.6
M007RVR044AR4	0.64	0.48	210	420	18.6	25.2	24.8	33.6	33	0.93	3 1/2	1.6
M007RVR063BR6	0.64	0.48	146	292	26.9	36.5	35.9	48.7	33	0.93	7 1/8	3.2
M007RVR086BR6	0.64	0.48	107	215	36.7	49.8	48.9	66.3	33	0.93	7 1/8	3.2
M007RVR119BR6	0.61	0.46	74	148	48.1	65.3	64.1	87.0	33	0.93	7 3/8	3.4
M007RVR151BR6	0.61	0.46	58	117	61.0	82.7	81.3	110.0	33	0.93	7 3/8	3.4
M007RVR188BR6	0.61	0.46	47	94	76.5	104.0	102.0	138.0	33	0.93	7 3/8	3.4
M007RVR275BR6	0.61	0.46	32	64	*111.0	*151.0	*148.0	*201.0	33	0.93	7 3/8	3.4
M007RVR374BR6	0.61	0.46	23	47	*152.0	*206.0	*202.0	*274.0	33	0.93	7 3/8	3.4

▲ ALL models must be operated with sufficient load to prevent speed from exceeding maximum allowable speed shown on performance curve.
* Applications with these models must be limited to 224 lb-ft (304 Nm) torque.
Performance figures are at 90 psig (620 kPa) air pressure.

SERIES M007 MULTI–VANE AIR MOTORS

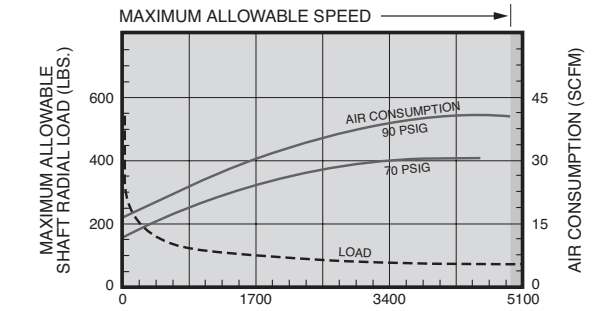

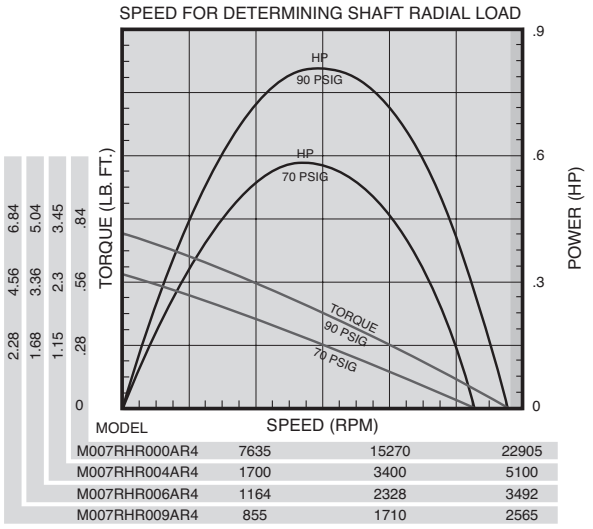

MODEL					
M007RHR000AR4	7635	15270	22905		
M007RHR004AR4	1700	3400	5100		
M007RHR006AR4	1164	2328	3492		
M007RHR009AR4	855	1710	2565		

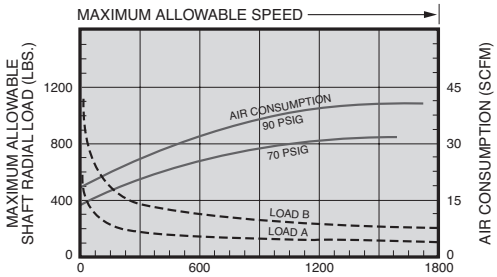

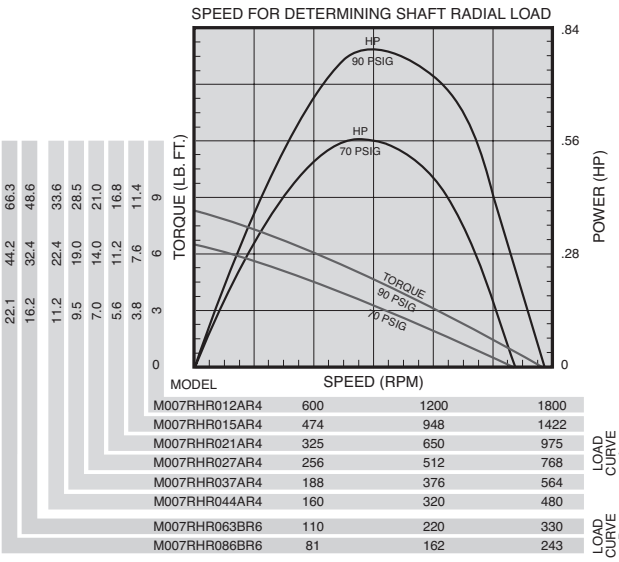

MODEL				
M007RHR012AR4	600	1200	1800	LOAD CURVE A
M007RHR015AR4	474	948	1422	
M007RHR021AR4	325	650	975	
M007RHR027AR4	256	512	768	
M007RHR037AR4	188	376	564	
M007RHR044AR4	160	320	480	
M007RHR063BR6	110	220	330	LOAD CURVE B
M007RHR086BR6	81	162	243	

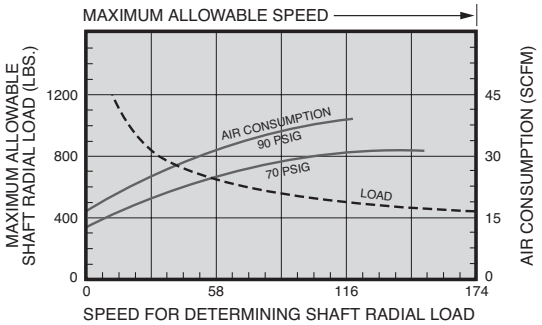

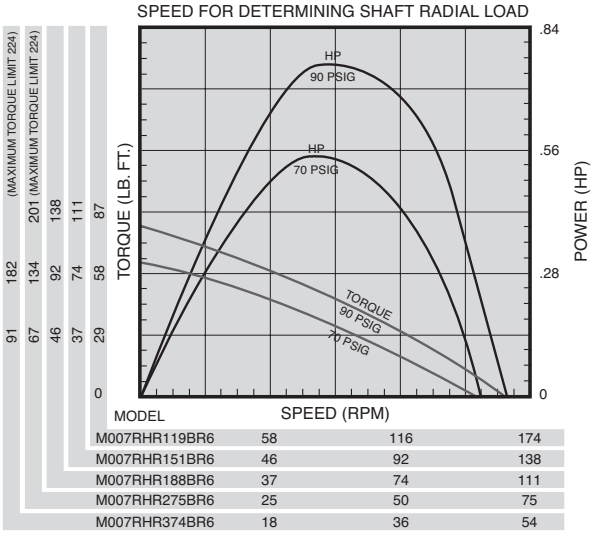

MODEL			
M007RHR119BR6	58	116	174
M007RHR151BR6	46	92	138
M007RHR188BR6	37	74	111
M007RHR275BR6	25	50	75
M007RHR374BR6	18	36	54

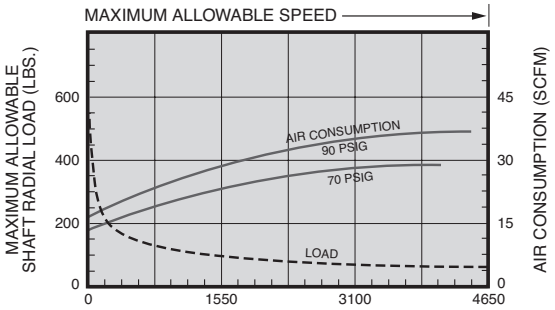

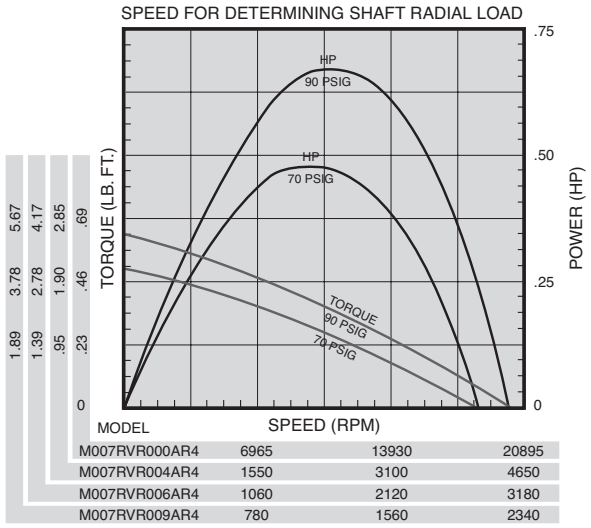

MODEL			
M007RVR000AR4	6965	13930	20895
M007RVR004AR4	1550	3100	4650
M007RVR006AR4	1060	2120	3180
M007RVR009AR4	780	1560	2340

SERIES M007 MULTI–VANE AIR MOTORS

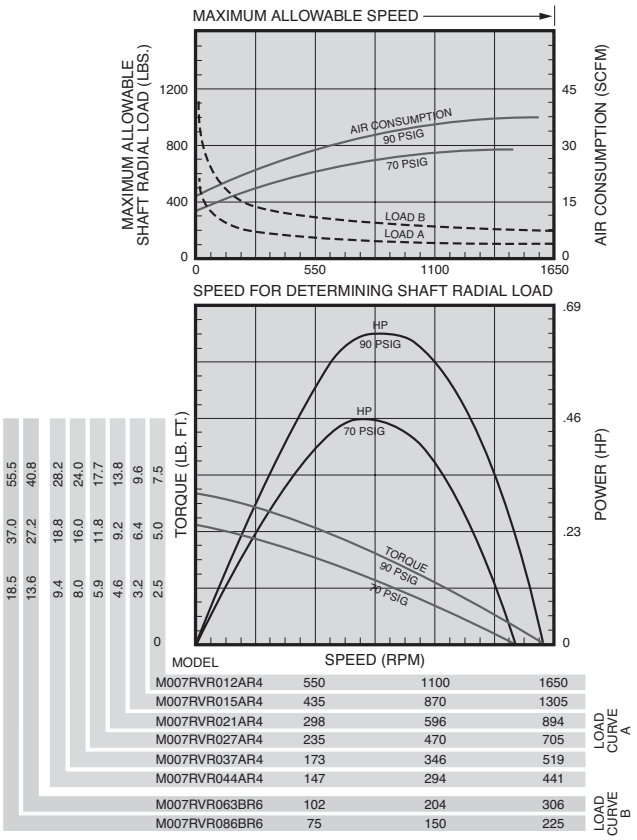

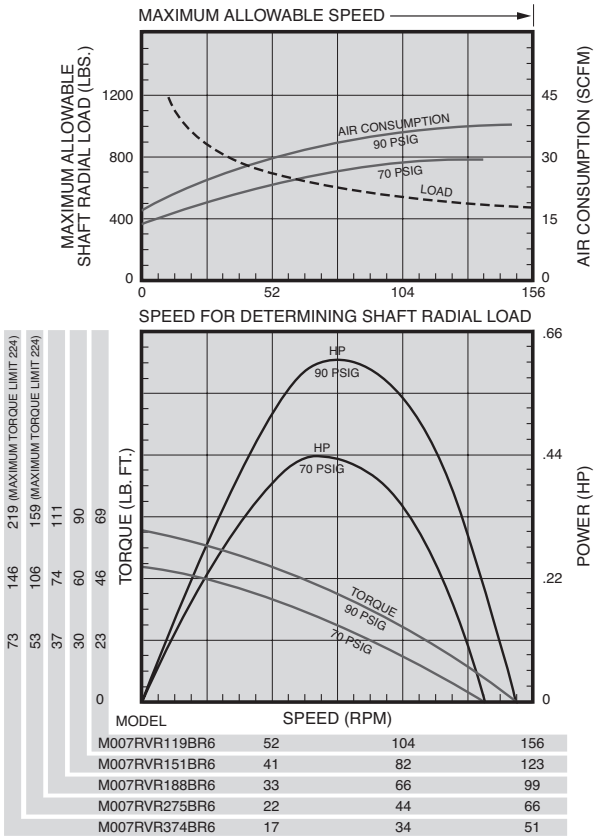

EQUIPMENT OPTIONS

Furnished with Cataloged Models	Standard Options	Extra Options
2 Hole Flange Mounting on Gear Ratios: 000, 004, 006, 009, 012, 15, 021, 027, 037, 044	4 Hole Flange Mounting on Gear Ratios: 000, 004, 006, 009, 012, 015, 021, 027, 037, 044	1⁄2″ Square Drive Shaft on Gear Ratios: 000, 004, 006, 009, 012, 015, 021, 027, 037, 044
6 Hole Face Mounting on Gear Ratios: 063, 086, 119, 151, 188, 275, 374	Side Inlet and Exhaust Housing (for Reversible Models only)	5⁄8″ Square Drive Shaft on Gear Ratios: 063, 086, 119, 151, 188, 275, 374
1⁄2″ Round Keyed Shaft on Gear Ratios: 000, 004, 006, 009, 012, 015, 021, 027, 037, 044	3⁄8″—24 or 1⁄2″—20 Threaded Shaft on Gear Ratios: 000, 004, 006, 009, 012, 015, 021, 027, 037, 044	
3⁄4″ Round Keyed Shaft on Gear Ratios: 063, 086, 119, 151, 188, 275, 374		

SERIES M007 MULTI-VANE MOTORS

DIMENSIONS

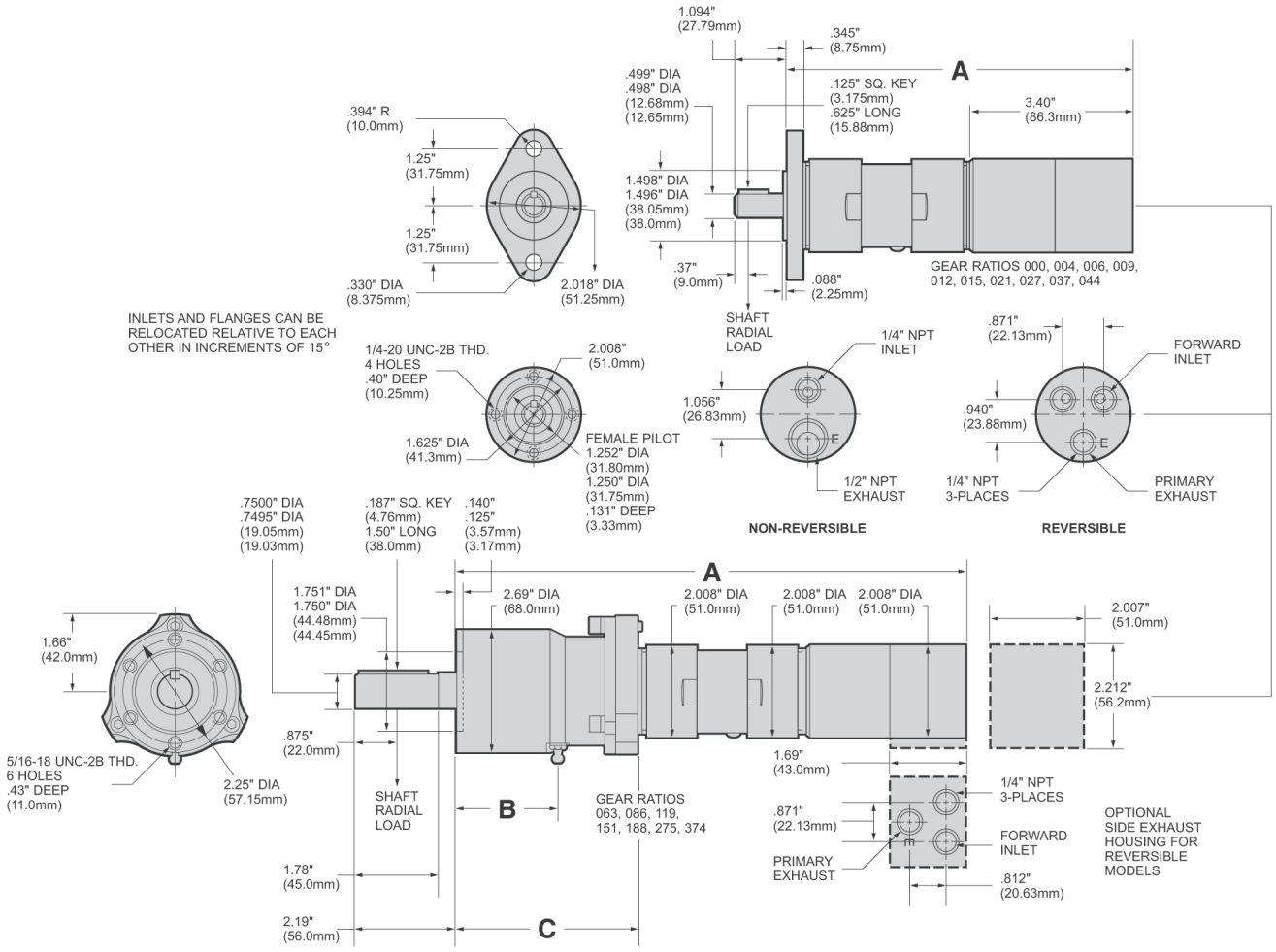

DIMENSIONS

Gear Ratios (Refer to Model No.)	A		B		C	
	in	mm	in	mm	in	mm
000, 004, 006, 009	7.362	187.0				
012, 015, 021, 027, 037, 044	8.133	206.56				
063, 086	9.343	237.3	0.41	10.0	2.3	58.4
119, 188, 275, 374, 151	10.937	277.8	2.19	56.0	3.9	99.0

SERIES M007 MODEL NUMBER SYMBOLIZATION

M	007	RV	R	021	A	R4
Motor	HP	Rotation	Air Inlet & Exhaust	Gear Ratio	Flange	Shaft

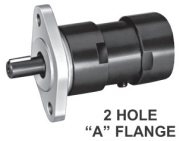

2 HOLE "A" FLANGE MOUNTING



4 HOLE "B" FACE MOUNTING



6 HOLE "B" FACE MOUNTING

HP = Approximate horsepower range (.61 to .85)

Rotation = RV Reversible
RH Non-Reversible, Right Hand from Rear of Motor (CCW facing shaft)
LH Non-Reversible, Left Hand from Rear of Motor (CW facing shaft)

Air Inlet & Exhaust = R Rear, S Side (Side Inlet and Exhaust available on Reversible Models only)

Gear Ratio = 028 is 1 to 28, 044 is 1 to 44, etc.

Flange = A 2 Hole Flange

B 4 Hole Face Mounting (on 000, 004, 006, 009, 012, 015, 021, 027, 037, 044 gear ratios)

B 6 Hole Face Mounting (on 063, 086, 119, 151, 188, 275, 374 gear ratios)

Shaft = R4 1/2″ Round Keyed (on 000, 004, 006, 009, 012, 015, 021, 027, 037, 044 gear ratios)

R6 3/4″ Round Keyed (on 063, 086, 119, 151, 188, 275, 374 gear ratios)

S4 1/2″ Square Drive (on 000, 004, 006, 009, 012, 015, 021, 027, 037, 044 gear ratios)
Shaft Extension 1.31″ (33.27 mm)

S5 5/8″ Square Drive (on 063, 086, 119, 151, 188, 275, 374 gear ratios)
Shaft Extension 1.25″ (31.75 mm)

T3 3/8″-24 UNF-2A Threaded (on 000, 004, 006, 009, 012, 015, 021, 027, 037, 044 gear ratios)
Shaft Extension .512″ (13 mm)

T4 1/2″-20 UNF-2A Threaded (on 000, 004, 006, 009, 012, 015, 021, 027, 037, 044 gear ratios)
Shaft Extension .512″ (13 mm)

2200–SERIES POWER MOTORS (WITH THREAD–ON GEARING)
SPECIFICATIONS



Model	Spindle	R.P.M.		Torque				Air Consumption at Free Speed		Sound Level at Free Speed	Weight		Gear Reduction
		Free Speed	Load Speed at Max. Hp	Stall		Output							
				lb-ft	Nm	lb-ft	Nm	SCFM	L/s	dB(A)	lbs	kg	
NON-REVERSIBLE - 0.85 HP													
7800-B	1/2″ Keyed	18,000	9,000	1.00	1.4	0.50	0.68	41.7	19.7	78	4.24	1.91	Single
7801-B	1/2″ Keyed	4,600	2,400	4.00	5.5	1.86	2.5	41.7	19.7	78	4.24	1.91	Single
7802-B	1/2″ Keyed	2,500	1,300	7.50	10.3	3.43	4.7	41.7	19.7	78	4.24	1.91	Single
7803-B	1/2″ Keyed	1,200	600	16.00	21.9	7.44	10.2	41.7	19.7	78	5.17	2.33	Double
7804-B	1/2″ Keyed	650	320	30.00	41.2	13.95	19.1	41.7	19.7	78	5.17	2.33	Double
7805-B	1/2″ Keyed	350	170	55.00	75.5	26.25	36.0	41.7	19.7	78	5.17	2.33	Double
7812-B	1/2″-20 Th'd.	350	170	55.00	75.5	26.25	36.0	41.7	19.7	78	5.17	2.33	Double
7813-B	1/2″-20 Th'd.	650	320	30.00	41.2	13.95	19.1	41.7	19.7	78	5.17	2.33	Double
7814-B	1/2″-20 Th'd.	18,000	9,000	1.00	1.4	0.50	0.68	41.7	19.7	78	4.24	1.91	Single
7815-B	1/2″-20 Th'd.	1,200	600	16.00	21.9	7.44	10.2	41.7	19.7	78	5.17	2.33	Double
7816-B	1/2″-20 Th'd.	4,600	2,400	4.00	5.5	1.86	2.5	41.7	19.7	78	4.24	1.91	Single
7817-B	1/2″-20 Th'd.	2,500	1,300	7.50	10.3	3.43	4.7	41.7	19.7	78	4.24	1.91	Single
REVERSIBLE - 0.70 HP													
7806-B	1/2″ Keyed	13,500	7,000	1.00	1.4	0.52	0.71	37.3	17.6	85*	4.24	1.91	Single
7807-B	1/2″ Keyed	3,400	1,800	4.00	5.5	2.04	2.8	37.3	17.6	85*	4.24	1.91	Single
7808-B	1/2″ Keyed	1,800	1,000	7.40	10.2	3.67	5.0	37.3	17.6	85*	4.24	1.91	Single
7809-B	1/2″ Keyed	850	450	15.50	21.3	8.16	11.2	37.3	17.6	85*	5.17	2.33	Double
7810-B	1/2″ Keyed	450	240	29.00	39.8	15.30	21.0	37.3	17.6	85*	5.17	2.33	Double
7811-B	1/2″ Keyed	250	130	54.00	74.0	28.20	38.7	37.3	17.6	85*	5.17	2.33	Double

* Requires installation for reversible motors - shown on page 92.

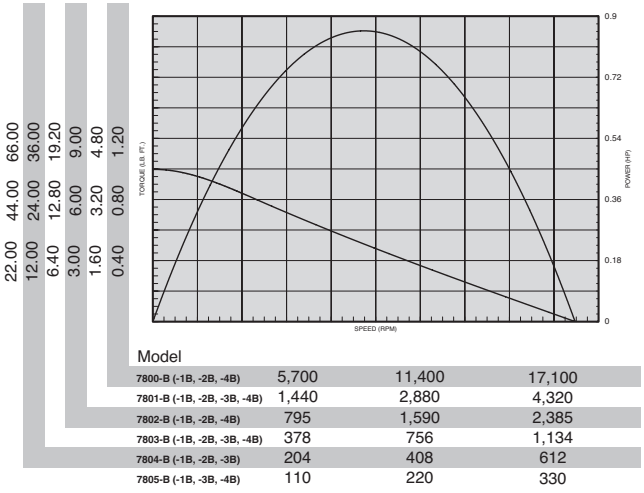

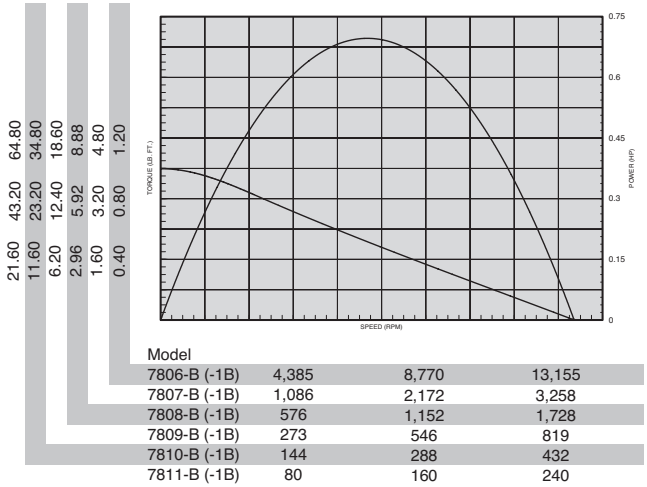

STANDARD EQUIPMENT

Steel motor housing, flush-type grease fittings at rotation points for gear and bearing lubrication, exhaust manifold rotatable within 360°, and muffler.

2200–SERIES POWER MOTORS AND MOUNTING ACCESSORIES

DIMENSIONS

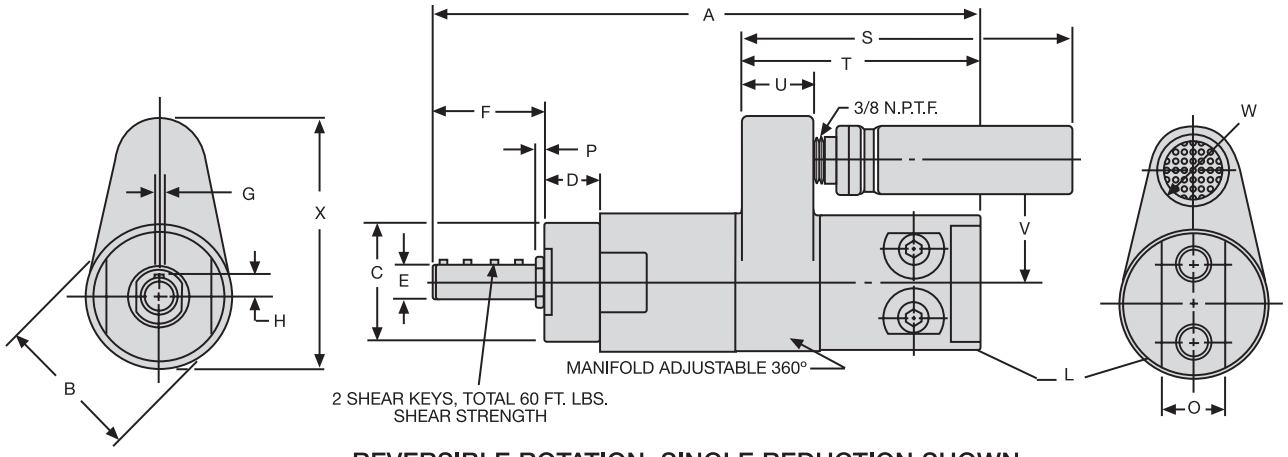

REVERSIBLE ROTATION, SINGLE REDUCTION SHOWN

Gear Reduction	Dimension A	
	Threaded Spindle	Keyed Spindle
Single	7 178 mm	8 203 mm
Double	$8^{7}/_{8}$ 225 mm	$9^{3}/_{4}$ 248 mm

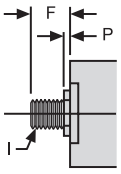

THREADED SPINDLE

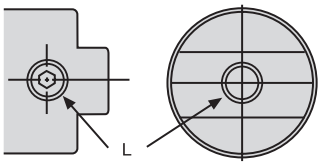

AIR INLETS,
FORWARD-ROTATION MOTORS

Scale	B	C	D	E	F-Keyed Spindle	F-Th'd. Spindle	G	H	I	L
in	2	1.740 1.760	0.818 0.838	0.4990 0.4995	1.588 1.646	0.619 0.677	0.125 0.126	0.299 0.309	1/2″-20 UNF-2A Thread	1/4″ NPTF Air Inlet
mm	51	44.20 44.70	20.78 21.29	12.67 12.69	40.34 41.81	15.72 17.20	3.18 3.20	7.59 7.85		

Scale	O	P	S	T	U	V	W-Fwd. Rotation	W Reversible	W-Fwd. Rotation	X Reversible
in	7/8	0.046 0.158	$4^{7}/_{8}$	$3^{1}/_{2}$	$1^{1}/_{16}$	$1^{13}/_{16}$	$1^{3}/_{8}$	1	$3^{1}/_{2}$	$3^{7}/_{16}$
mm	22	1.17 4.01	124	89	27	46	35	25	89	87

2200–SERIES POWER MOTORS (WITH BOLT–ON GEARING)
SPECIFICATIONS



Model	Spindle	R.P.M.		Torque				Air Consumption at Free Speed		Sound Level at Free Speed	Weight		Gear Reduction
		Free Speed	Load Speed at Max. Hp	Stall		Output							
				lb-ft	Nm	lb-ft	Nm	SCFM	L/s	dB(A)	lbs	kg	
NON-REVERSIBLE - 0.85 HP													
7800-1B	1/2″ Keyed	18,000	9,000	1.00	1.4	0.50	0.68	41.7	19.7	78	4.24	1.91	Single
7801-1B	1/2″ Keyed	4,600	2,400	4.00	5.5	1.86	2.5	41.7	19.7	78	4.24	1.91	Single
7802-1B	1/2″ Keyed	2,500	1,300	7.50	10.3	3.43	4.7	41.7	19.7	78	4.24	1.91	Single
7803-1B	1/2″ Keyed	1,200	600	16.00	21.9	7.44	10.2	41.7	19.7	78	5.17	2.33	Double
7804-1B	1/2″ Keyed	650	320	30.00	41.2	13.95	19.1	41.7	19.7	78	5.17	2.33	Double
7805-1B	1/2″ Keyed	350	170	55.00	75.5	26.25	36.0	41.7	19.7	78	5.17	2.33	Double
7812-1B	1/2″-20 Th'd.	350	170	55.00	75.5	26.25	36.0	41.7	19.7	78	5.17	2.33	Double
7813-1B	1/2″-20 Th'd.	650	320	30.00	41.2	13.95	19.1	41.7	19.7	78	5.17	2.33	Double
7814-1B	1/2″-20 Th'd.	18,000	9,000	1.00	1.4	0.50	0.68	41.7	19.7	78	4.24	1.91	Single
7815-1B	1/2″-20 Th'd.	1,200	600	16.00	21.9	7.44	10.2	41.7	19.7	78	5.17	2.33	Double
7816-1B	1/2″-20 Th'd.	4,600	2,400	4.00	5.5	1.86	2.5	41.7	19.7	78	4.24	1.91	Single
7817-1B	1/2″-20 Th'd.	2,500	1,300	7.50	10.3	3.43	4.7	41.7	19.7	78	4.24	1.91	Single
REVERSIBLE - 0.70 HP													
7806-1B	1/2″ Keyed	13,500	7,000	1.00	1.4	0.52	0.71	37.3	17.6	85*	4.36	1.96	Single
7807-1B	1/2″ Keyed	3,400	1,800	4.00	5.5	2.04	2.8	37.3	17.6	85*	4.36	1.96	Single
7808-1B	1/2″ Keyed	1,800	1,000	7.40	10.2	3.67	5.0	37.3	17.6	85*	4.36	1.96	Single
7809-1B	1/2″ Keyed	850	450	15.50	21.3	8.16	11.2	37.3	17.6	85*	5.67	2.55	Double
7810-1B	1/2″ Keyed	450	240	29.00	39.8	15.30	21.0	37.3	17.6	85*	5.67	2.55	Double
7811-1B	1/2″ Keyed	250	130	54.00	74.0	28.20	38.7	37.3	17.6	85*	5.67	2.55	Double

* Requires installation for reversible motors - shown on page 92

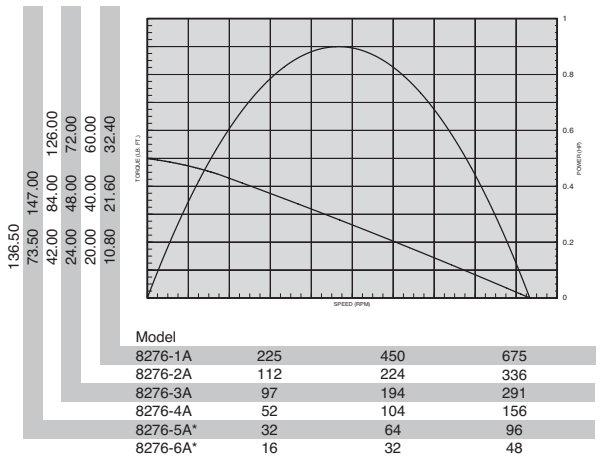

Model			
8276-1A	225	450	675
8276-2A	112	224	336
8276-3A	97	194	291
8276-4A	52	104	156
8276-5A*	32	64	96
8276-6A*	16	32	48

***Note:** Maximum torque recommended for planetary gear system on these models requires shear key with 150 ft/lbs shear strength.

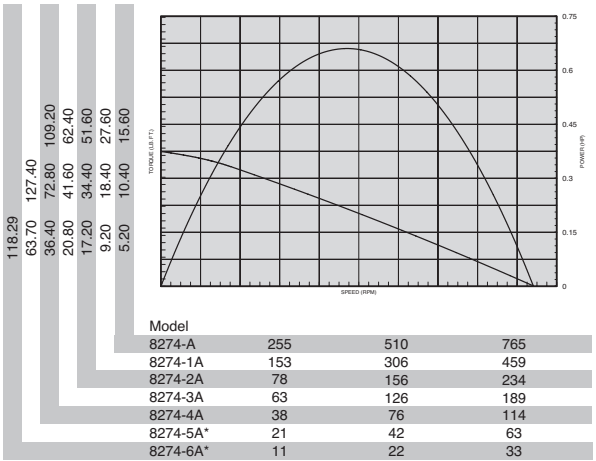

Model			
8274-A	255	510	765
8274-1A	153	306	459
8274-2A	78	156	234
8274-3A	63	126	189
8274-4A	38	76	114
8274-5A*	21	42	63
8274-6A*	11	22	33

***Note:** Maximum torque recommended for planetary gear system on these models requires shear key with 150 ft/lbs shear strength.

STANDARD EQUIPMENT

Steel motor housing, flush-type grease fittings at rotation points for gear and bearing lubrication, exhaust manifold rotatable within 360°, and muffler.

2200–SERIES POWER MOTORS AND MOUNTING ACCESSORIES

DIMENSIONS

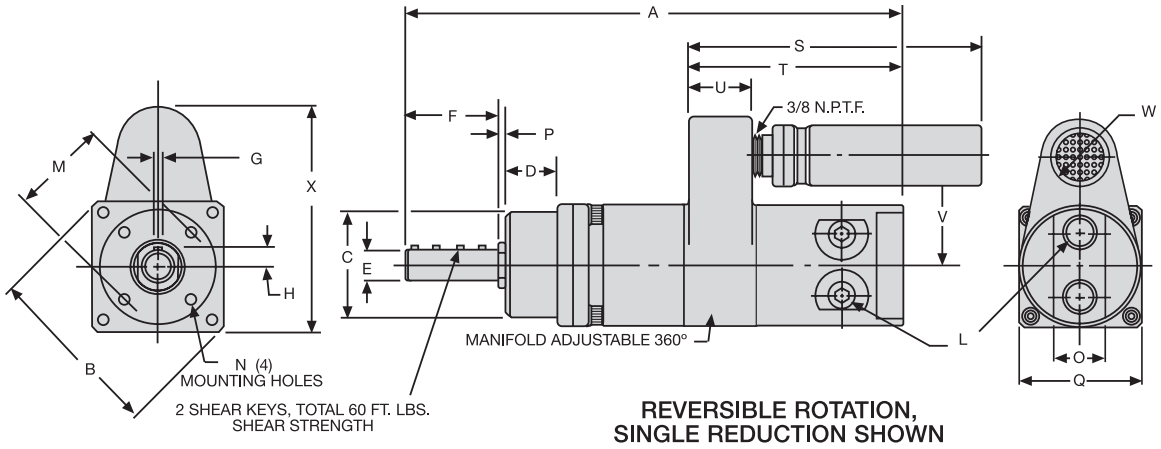

REVERSIBLE ROTATION,
SINGLE REDUCTION SHOWN

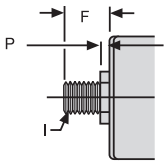

THREADED
SPINDLE

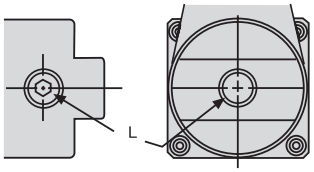

AIR INLETS,
SINGLE DIRECTION MOTORS

Models	Gear Reduction	Dimension A
7800-1B 7801-1B 7802-1B 7806-1B 7807-1B 7808-1B	Single	8 1/8 206 mm
7803-1B 7804-1B 7805-1B 7809-1B 7810-1B 7811-1B	Double	9 29/32 252 mm
7814-1B 7816-1B 7817-1B	Single	7 5/32 182 mm
7812-1B 7813-1B 7815-1B	Double	8 15/16 227 mm

Scale	B	C	D	E	F-Keyed Spindle	F-Th'd. Spindle	G	H	I	L	M	N
in	2 11/16	1.7490 1.7495	0.781 0.812	0.4990 0.4995	1.615 1.653	0.646 0.684	0.125 0.126	0.299 0.309	1/2"-20 UNF-2A Thread	1/4 NPTF Air Inlet	1.432 1.442	10-24 UNC-2B Thread
mm	68	44.42 44.44	19.84 20.62	12.67 12.69	41.02 41.99	16.41 17.37	3.18 3.20	7.59 7.85			36.37 36.63	

Scale	O	P	Q	S	T	U	V	W-Fwd. Rotation	W Reversible	X-Fwd. Rotation	X Reversible
in	7/8	0.113 0.165	2	4 7/8	3 1/2	1 1/16	1 13/16	1 3/8	1	3 1/2	3 7/16
mm	22	2.87 4.19	51	124	89	27	46	35	25	89	87

2200–SERIES POWER MOTORS (WITH 44–SERIES GEARING)

SPECIFICATIONS



Model	Spindle	R.P.M.		Torque				Air Consumption at Free Speed		Sound Level at Free Speed	Weight		Gear Reduction
		Free Speed	Load Speed at Max. Hp	Stall		Output							
				lb-ft	Nm	lb-ft	Nm	SCFM	L/s	dB(A)	lbs	kg	
NON-REVERSIBLE - 0.90 HP													
8276-1A	7/8″ Keyed	700	350	27.0	37.0	13.5	18.5	41.6	19.6	78	10.10	4.55	2
8276-2A	7/8″ Keyed	350	180	50.0	68.0	26.0	36.0	41.6	19.6	78	10.10	4.55	2
8276-3A	7/8″ Keyed	300	150	60.0	82.0	32.0	43.0	41.6	19.6	78	14.50	6.52	3
8276-4A	7/8″ Keyed	160	90	105.0	143.0	53.0	72.0	41.6	19.6	78	14.50	6.52	3
8276-5A**	7/8″ Keyed	100	50	150.0**	206.0	95.0	130.0	41.6	19.6	78	14.50	6.52	3
8276-6A**	7/8″ Keyed	50	25	150.0**	206.0	150.0**	206.0	41.6	19.6	78	14.50	6.52	3
REVERSIBLE - 0.65 HP													
8274-A	7/8″ Keyed	800	450	13.0	18.0	7.6	10.5	35.0	16.5	83*	10.10	4.55	2
8274-1A	7/8″ Keyed	475	250	23.0	32.0	14.0	19.0	35.0	16.5	83*	10.10	4.55	2
8274-2A	7/8″ Keyed	250	130	43.0	59.0	26.0	36.0	35.0	16.5	83*	10.10	4.55	2
8274-3A	7/8″ Keyed	200	110	52.0	71.0	31.0	42.0	35.0	16.5	83*	14.50	6.52	3
8274-4A	7/8″ Keyed	120	60	91.0	125.0	57.0	78.0	35.0	16.5	83*	14.50	6.52	3
8274-5A**	7/8″ Keyed	65	35	150.0**	206.0	98.0	134.0	35.0	16.5	83*	14.50	6.52	3
8274-6A**	7/8″ Keyed	35	18	150.0**	206.0	150.0**	206.0	35.0	16.5	83*	14.50	6.52	3

* Requires installation for reversible motors - shown on page 92

** NOTE: Maximum torque recommended for planetary gear system on these models requires shear key with 150 ft./lbs. shear strength.

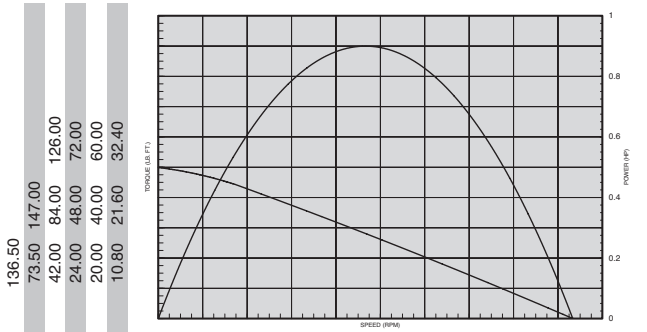

Model			
8276-1A	225	450	675
8276-2A	112	224	336
8276-3A	97	194	291
8276-4A	52	104	156
8276-5A*	32	64	96
8276-6A*	16	32	48

*NOTE: Maximum torque recommended for planetary gear system on these models requires shear key with 150 ft./lbs. shear strength.

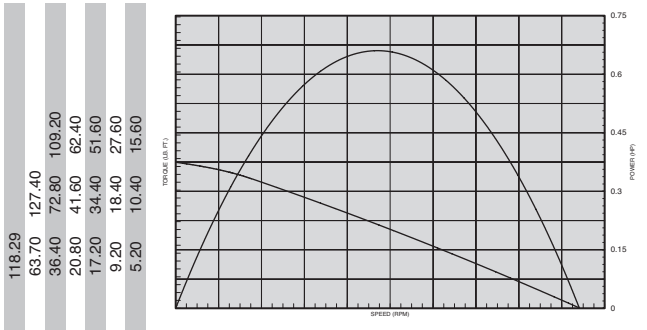

Model			
8274-A	255	510	765
8274-1A	153	306	459
8274-2A	78	156	234
8274-3A	63	126	189
8274-4A	38	76	114
8274-5A*	21	42	63
8274-6A*	11	22	33

*NOTE: Maximum torque recommended for planetary gear system on these models requires shear key with 150 ft./lbs. shear strength.

STANDARD EQUIPMENT

Steel motor housing, flush-type grease fittings at rotation points for gear and bearing lubrication, exhaust manifold rotatable within 360°, and muffler.

2200/44–SERIES POWER MOTORS AND MOUNTING ACCESSORIES

DIMENSIONS

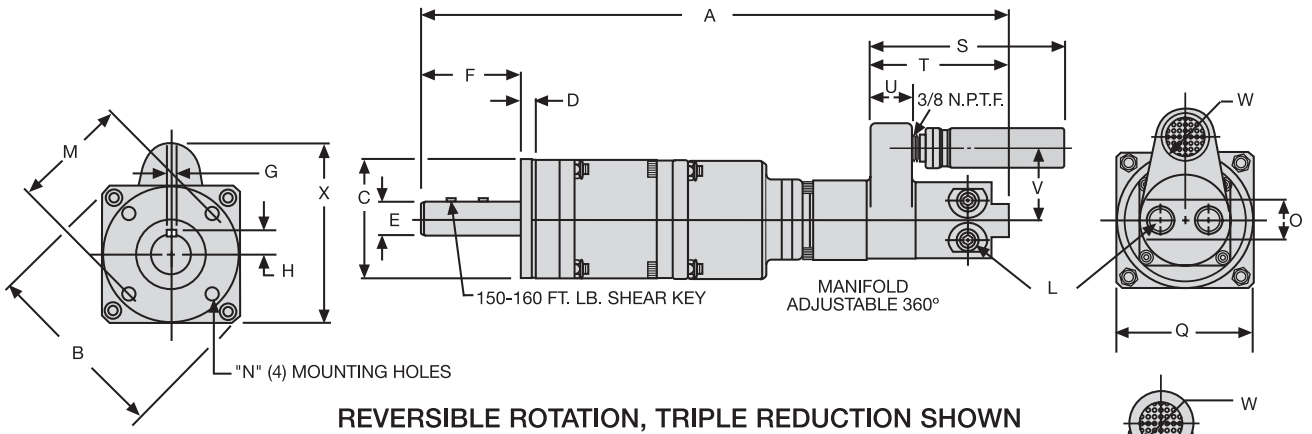

REVERSIBLE ROTATION, TRIPLE REDUCTION SHOWN

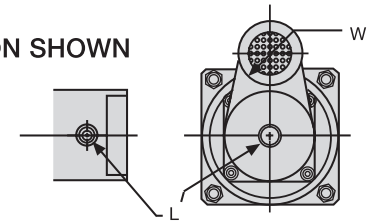

AIR INLETS, FORWARD-ROTATION MOTORS

Gear Reduction	Dimension A
Double	$11^{15}/_{16}$ 303 mm
Triple	$14^{3}/_{4}$ 375 mm

Scale	B	C	D	E	F	G	H	L	M	N
in	4.090 4.110	2.996 2.998	0.369 0.374	0.8743 0.8748	2.483 2.559	0.1872 0.1875	0.528 0.531	1/4 NPTF Air Inlet	2.495 2.505	5/16-24 UNF-2B Thread
mm	103.89 104.39	76.10 76.15	9.37 9.50	22.21 22.22	63.07 65.00	4.75 4.76	13.41 13.48		63.37 63.63	

Scale	O	Q	S	T	U	V	W-Fwd. Rotation	W Reversible	X Reversible	X Single
in	7/8	3	$4^{7}/_{8}$	$3^{1}/_{2}$	$1^{1}/_{6}$	$1^{13}/_{16}$	$1^{3}/_{8}$	1	$3^{15}/_{16}$	4
mm	22	76	124	89	27	46	35	25	100	102

SERIES 1801 AND 1841 MULTI–VANE AIR MOTORS
SPECIFICATIONS



Model	Max. Power		Speed at Max. Power	Free Speed ▲	Starting Torque		Stall Torque		Air Consumption at Max. Power		Weight	
	hp	kw	rpm	rpm	lb-ft	Nm	lb-ft	Nm	scfm	m^3/m	lb	kg
NON-REVERSIBLE Direction of rotation is counterclockwise when facing the shaft.												
1801N	1.40	1.04	918	1990	10.5	14.2	14	19.0	46	1.3	5 3/8	2.44
1801P	1.35	1.01	500	1050	17.2	23.3	23	31.2	46	1.3	5 3/4	2.61
1801Q	1.35	1.01	300	650	30.0	40.7	40	54.2	46	1.3	5 3/4	2.61
1801U	1.35	1.01	205	435	41.0	55.6	55	74.6	46	1.3	5 3/4	2.61
1801W	1.35	1.01	175	370	52.0	70.5	70	94.9	46	1.3	5 3/4	2.61
REVERSIBLE Direction of rotation is counterclockwise when facing the shaft.												
1841N	1.2	0.89	800	1,700	9.3	12.6	12.5	17.0	43	1.22	5 1/2	2.50
1841P	1.1	0.82	430	900	15.0	20.3	20.0	27.1	43	1.22	5 7/8	2.67
1841Q	1.1	0.82	260	550	27.0	36.6	36.0	48.8	43	1.22	5 7/8	2.67
1841U	1.1	0.82	175	380	37.0	50.2	50.0	67.8	43	1.22	5 7/8	2.67
1841W	1.1	0.82	150	320	45.0	61.0	60.0	81.4	43	1.22	5 7/8	2.67

▲ ALL models must be operated with sufficient load to prevent speed from exceeding maximum allowable speed shown on performance curve. Performance figures are at 90 psig (620 kPa) air pressure.

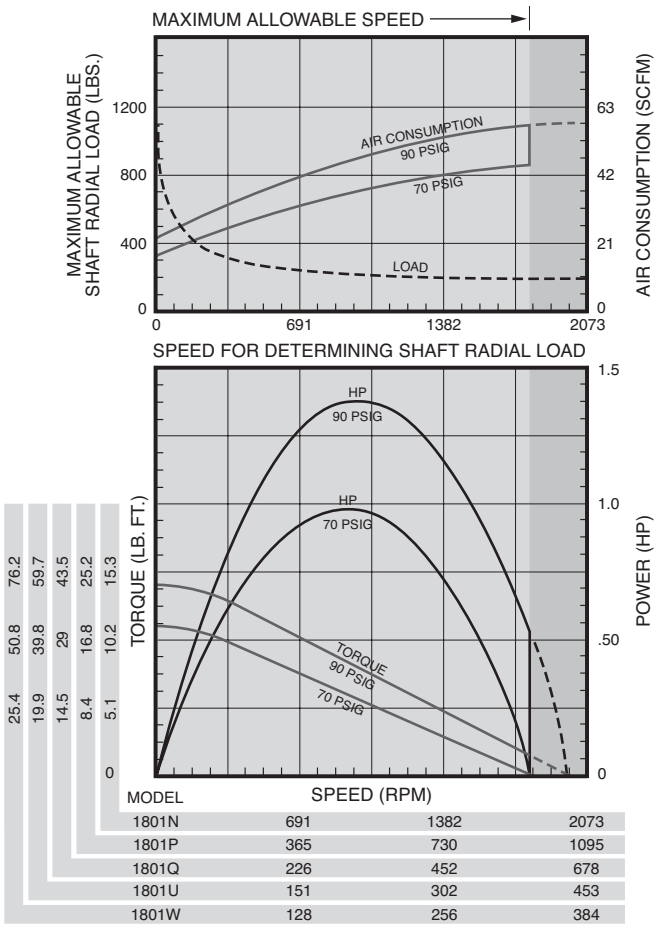

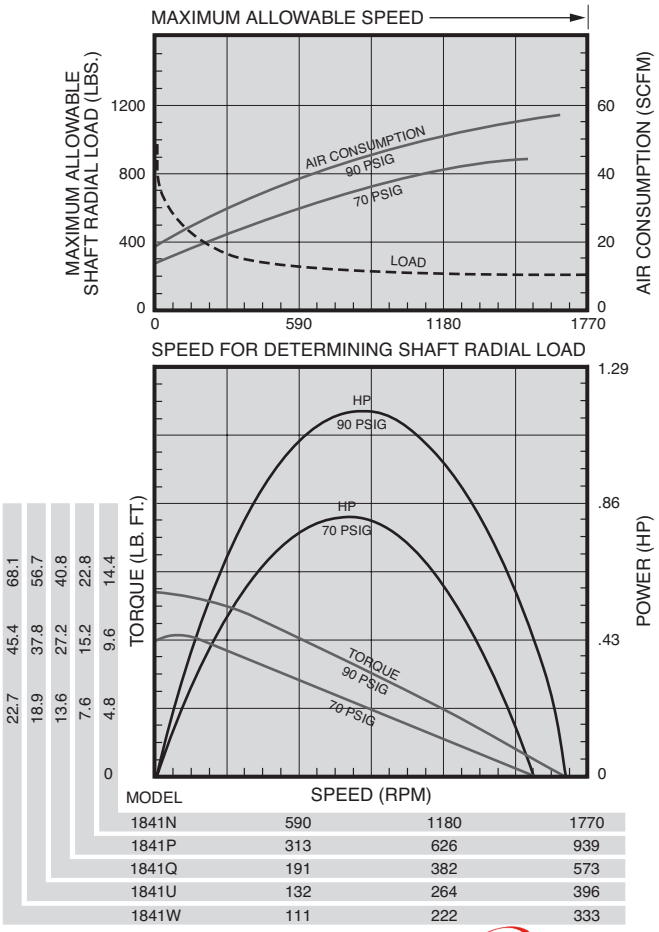

SERIES 1801 AND 1841 MULTI–VANE AIR MOTORS

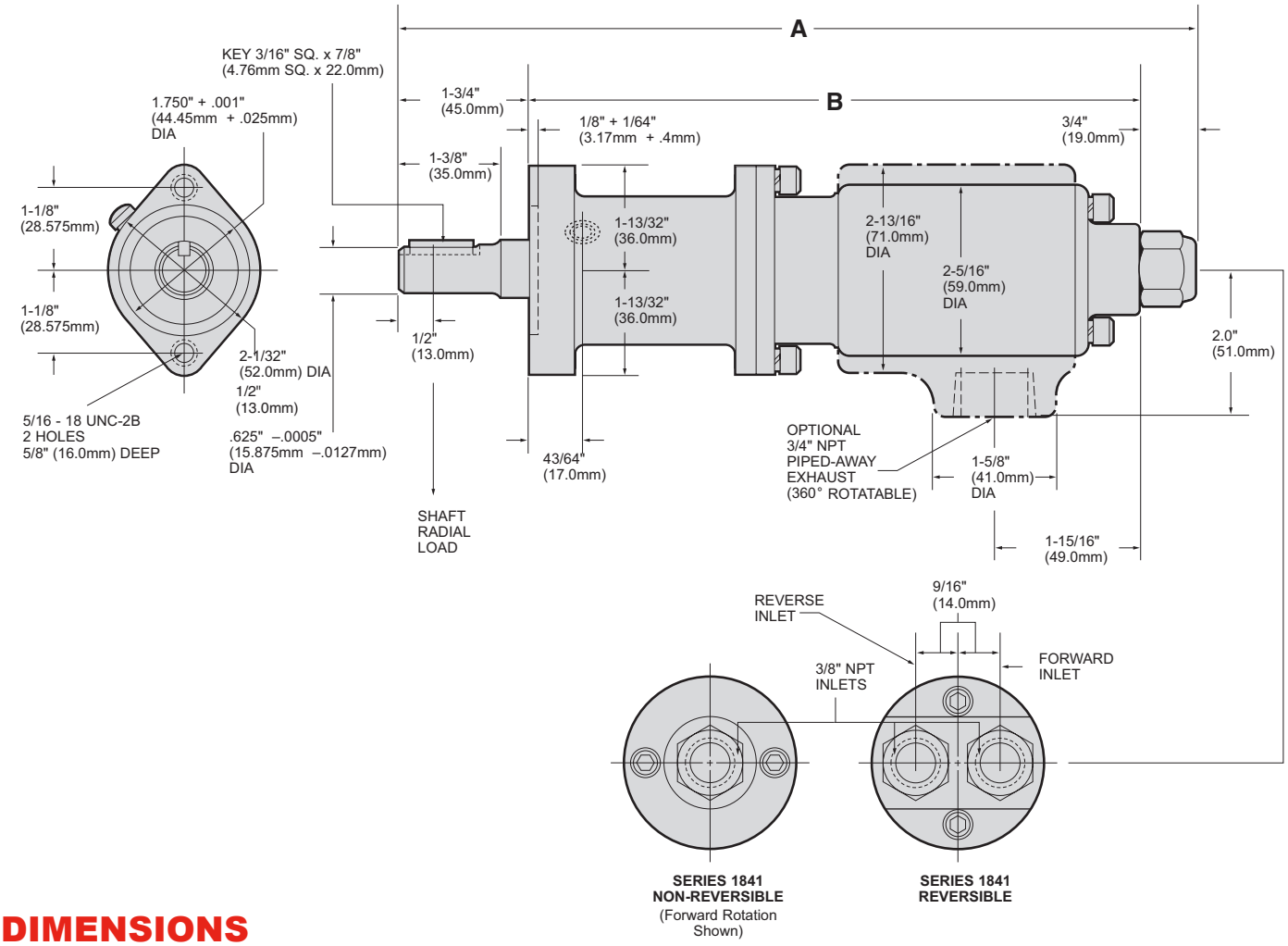

DIMENSIONS

Models	A		B	
	in	mm	in	mm
1801N, 1841N	$9^{7}/_{16}$	240	$6^{15}/_{16}$	176
1801P, 1801Q, 1801U, 1801W, 1841P, 1841Q, 1841U, 1841W	$10^{13}/_{16}$	275	$8^{5}/_{16}$	211

EQUIPMENT OPTIONS

Furnished with Cataloged Models	Extra Options
2 Hole Face Mounting	R1801-A123 Exhaust Deflector Assembly with 3⁄4″ Pipe Tap
	1⁄2″ Square Drive Shaft on Gear Ratios: P, Q, U Shaft Extension 1.19″ (30.23mm)*

* To order Motor with Square Drive Shaft, add the suffix “2” to the Model Number. Example: 1841Q2.

SERIES 3800 AND 3840 MULTI–VANE AIR MOTORS
SPECIFICATIONS



Model	Max. Power		Speed at Max. Power	Free Speed ▲	Starting Torque		Stall Torque		Air Consumption at Max. Power		Weight	
	hp	kw	rpm	rpm	lb-ft	Nm	lb-ft	Nm	scfm	m^3/m	lb	kg
NON-REVERSIBLE Direction of rotation is counterclockwise when facing the shaft												
3800M	1.55	1.16	520	1,100	24	32.5	33	44.8	48	1.36	7 1/8	3.23
3800P	1.45	1.08	285	600	42	57	56.5	76.6	48	1.36	8 1/2	3.86
3800Q	1.45	1.08	180	375	62	84	83.5	113	48	1.36	8 1/2	3.86
3800R	1.45	1.08	150	320	72	98	96	130	48	1.36	8 1/2	3.86
3800S	1.45	1.08	120	255	88	119	118	160	48	1.36	8 1/2	3.86
3800U	1.45	1.08	105	220	105	142	140	189	48	1.36	8 1/2	3.86
REVERSIBLE												
3840M	1.40	1.04	390	825	23	31.2	31.5	42.7	44	1.25	7 3/8	3.35
3840P	1.35	1.01	215	440	40	54.2	53.5	72.6	44	1.25	8 3/4	3.97
3840Q	1.35	1.01	130	280	60	81.4	80	106	44	1.25	8 3/4	3.97
3840R	1.35	1.01	122	238	69	93	92	125	44	1.25	8 3/4	3.97
3840S	1.35	1.01	100	190	86	116	115	156	44	1.25	8 3/4	3.97
3840U	1.35	1.01	83	162	100	135	134	181	44	1.25	8 3/4	3.97

▲ ALL models must be operated with sufficient load to prevent speed from exceeding maximum allowable speed shown on performance curve. Performance figures are at 90 psig (620 kPa) air pressure.

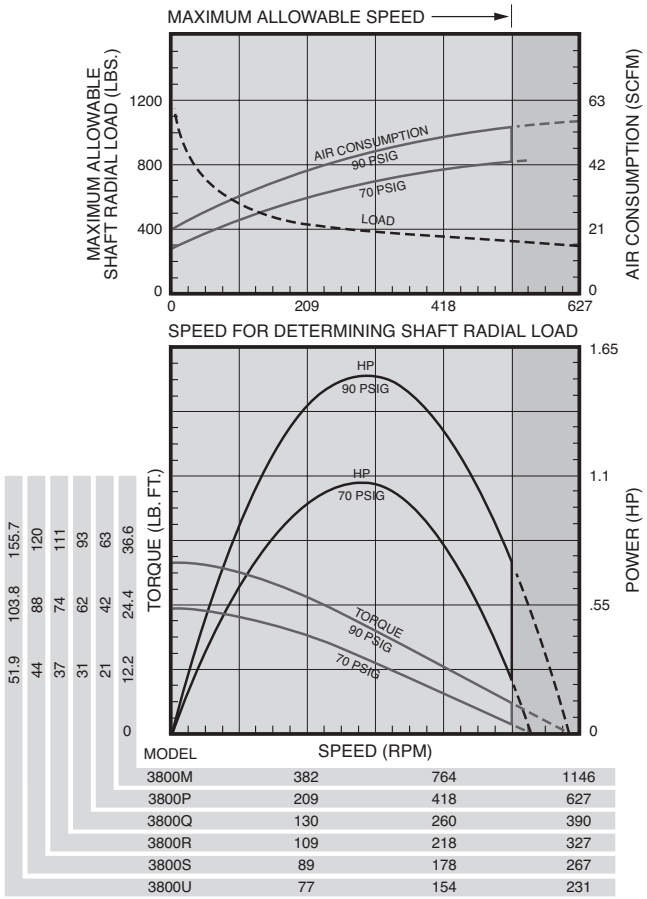

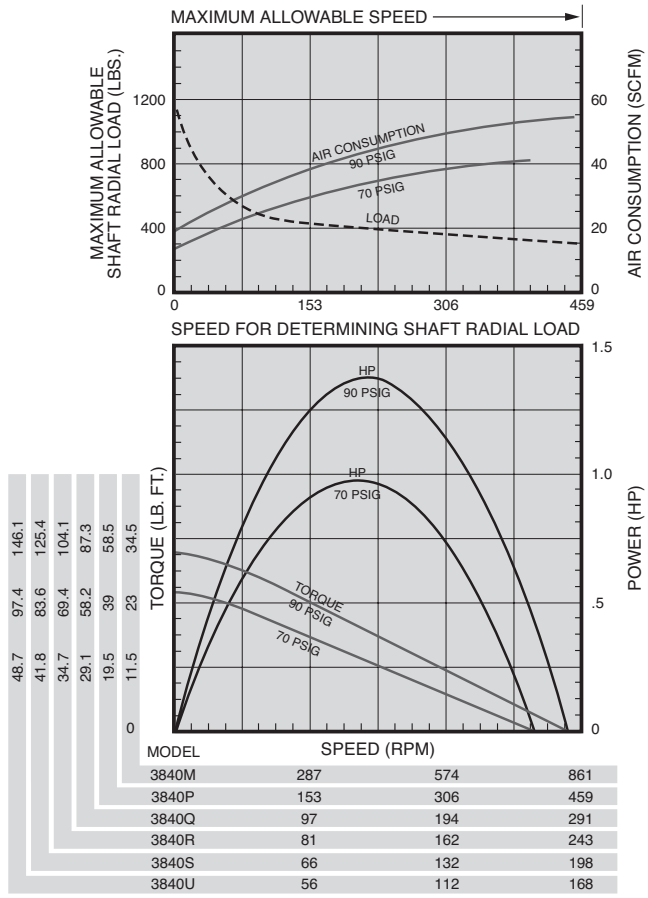

SERIES 3800 AND 3840 MULTI–VANE AIR MOTORS

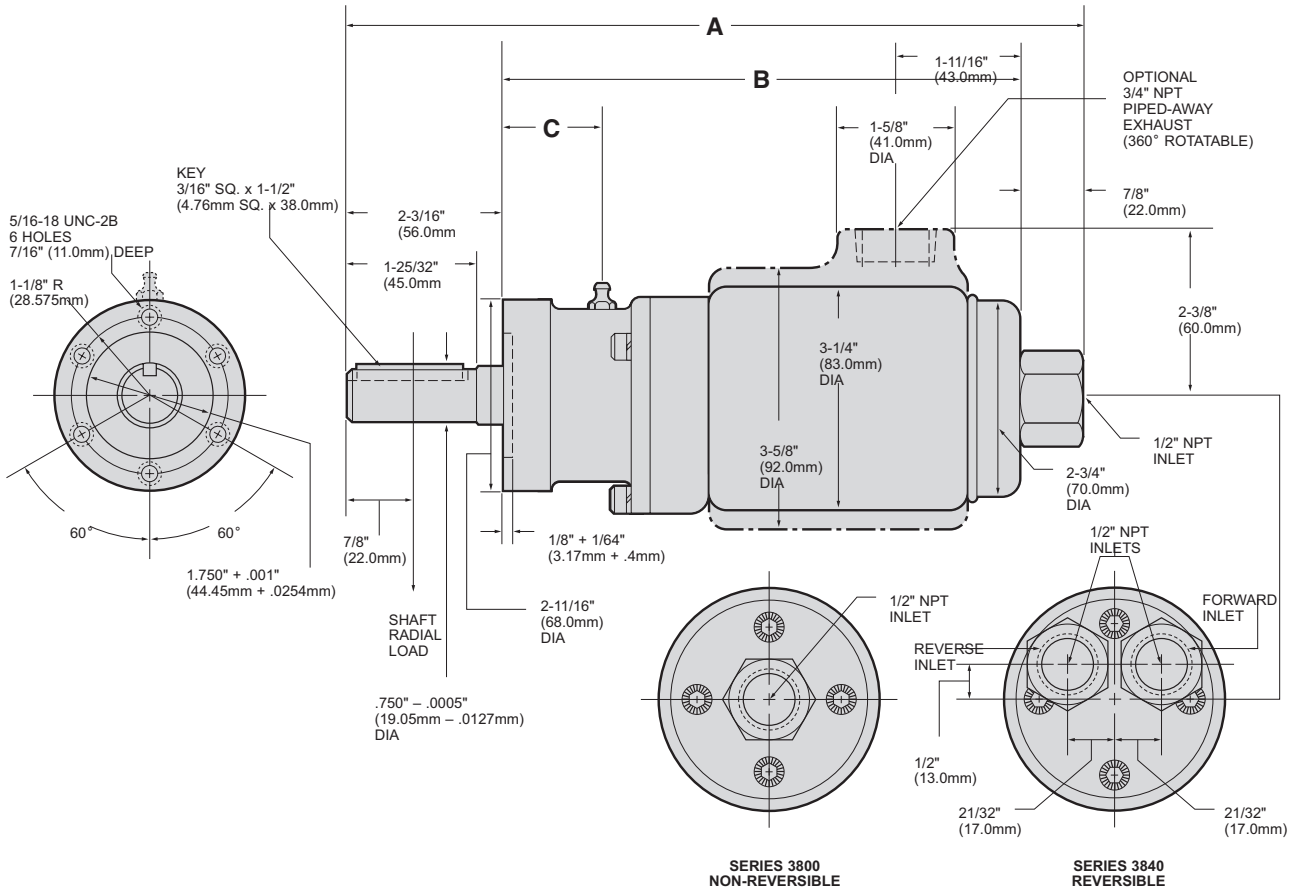

DIMENSIONS

Models	A		B		C	
	in	mm	in	mm	in	mm
3800M, 3840M	$10^{1}/_{16}$	256	7	178	$1^{1}/_{16}$	27
3800P, 3800Q, 3800R, 3800S, 3800U 3840P, 3840Q, 3840R, 3840S, 3840U	$11^{13}/_{16}$	299	$8^{11}/_{16}$	221	$2^{3}/_{16}$	56

EQUIPMENT OPTIONS

Furnished with Cataloged Models	Extra Options
6 Hole Face Mounting	R3800-A123 Exhaust Deflector Assembly with 3⁄4″ Pipe Tap
	*5⁄8″ Square Drive Shaft Shaft Extension 1.19″ (30.23mm)

* To order Motor with Square Drive Shaft, add the suffix “2” to the Model Number. Example: 3840Q2.

44–SERIES POWER MOTORS
SPECIFICATIONS



Model	Spindle	R.P.M.		Torque				Air Consumption at Free Speed		Sound Level at Free Speed	Weight		Gear Reduction
		Free Speed	Load Speed at Max. Hp	Stall		Output at Max. Hp							
				lb-ft	Nm	lb-ft	Nm	SCFM	L/s	dB(A)	lbs	kg	
NON-REVERSIBLE - 2.0 HP													
8200-A	7/8″ Keyed	275	140	124.00	168.0	75.00	101.6	95.0	44.8	80	18.24	8.20	Double
8201-A	7/8″ Keyed	500	255	70.50	95.5	41.00	55.5	95.0	44.8	80	18.24	8.20	Double
8202-A	7/8″ Keyed	900	445	40.50	54.9	24.00	32.5	95.0	44.8	80	18.24	8.20	Double
8204-A	7/8″ Keyed	3,500	1,740	10.20	13.8	6.00	8.1	95.0	44.8	80	13.82	5.21	Single
8205-A	7/8″ Keyed	14,000	7,000	2.85	3.9	1.50	2.0	95.0	44.8	80	13.82	5.21	Single
REVERSIBLE - 1.9 HP													
8206-A	7/8″ Keyed	275	150	105.00	142.3	66.5	90.1	93.5	44.1	95*	18.24	8.20	Double
8207-A	7/8″ Keyed	500	250	60.00	81.3	39.9	54.1	93.5	44.1	95*	18.24	8.20	Double
8208-A	7/8″ Keyed	900	450	35.00	47.4	22.2	30.1	93.5	44.1	95*	18.24	8.20	Double
8209-A	7/8″ Keyed	2,000	1,000	15.0	20.3	9.97	13.5	93.5	44.1	95*	13.82	5.21	Single
8210-A	7/8″ Keyed	3,500	1,800	8.5	11.5	5.54	7.5	93.5	44.1	95*	13.82	5.21	Single
8211-A	7/8″ Keyed	14,000	7,000	2.2	3.0	1.43	1.9	93.5	44.1	95*	13.82	5.21	Single

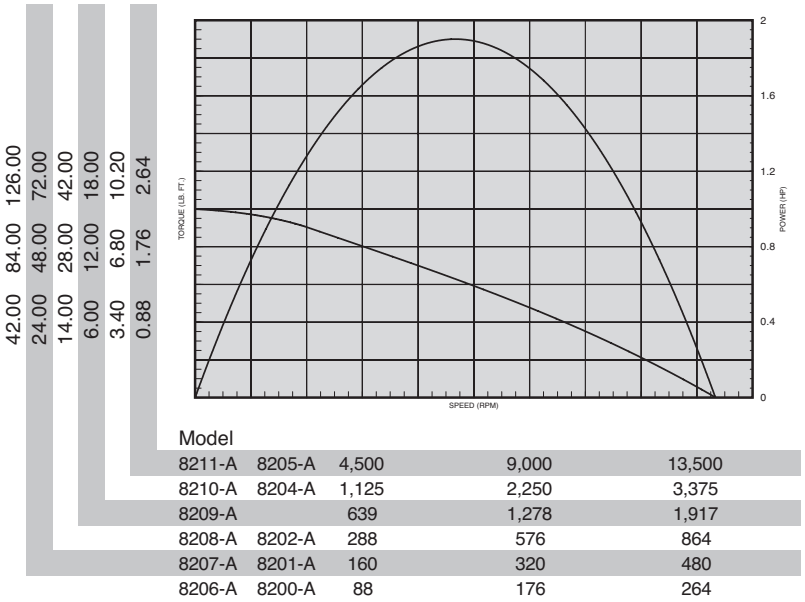

STANDARD EQUIPMENT

Steel motor housing, flush-type grease fittings at rotation points for gear and bearing lubrication, exhaust manifold rotatable within 360°, and muffler.

44–SERIES POWER MOTORS AND MOUNTING ACCESSORIES

DIMENSIONS

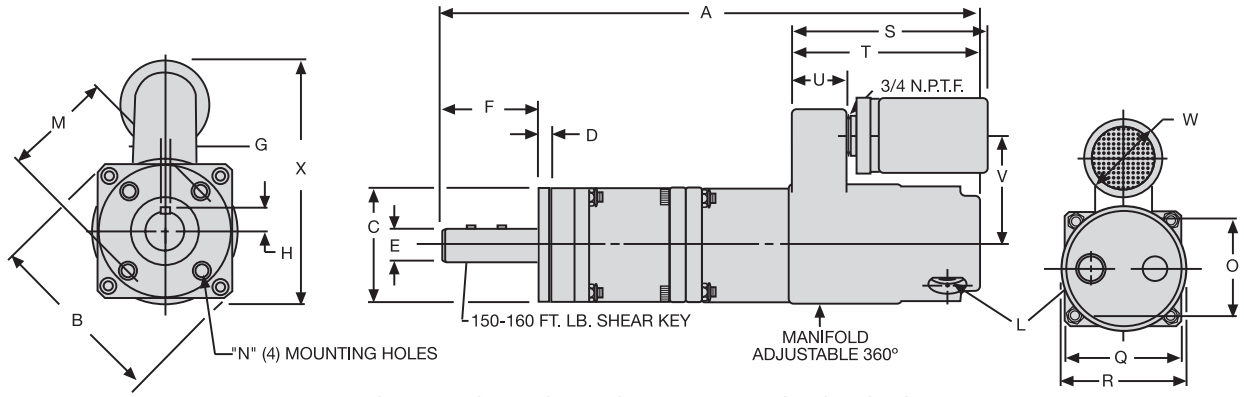

REVERSIBLE ROTATION, DOUBLE REDUCTION SHOWN

Models	Gear Reduction	Dimension A
8203-A 8204-A 8205-A 8209-A 8210-A 8211-A	Single	$11^{17}/_{64}$ 286 mm
8206-A 8207-A 8208-A 8200-A 8201-A 8202-A	Double	$14^{1}/_{16}$ 373 mm

Scale	B	C	D	E	F	G	H	L	M	N
in	4.090 4.110	2.996 2.998	0.369 0.374	0.8743 0.8748	2.483 2.559	0.1872 0.1875	0.528 0.531	3/8 NPTF Air Inlet	2.498 2.502	5/1624 UNF-2B Thread
mm	103.89 104.39	76.10 76.15	9.37 9.50	22.21 22.22	63.07 65.00	4.75 4.76	13.41 13.49		63.45 63.55	

Scale	O	G	R	S	T	U	V	W	X
in	$2^{1}/_{2}$	3	$3^{3}/_{16}$	$5^{3}/_{16}$	5	$1^{7}/_{16}$	$2^{27}/_{32}$	2	$5^{7}/_{16}$
mm	63	76	81	132	127	36	72	51	138

SERIES 4800 AND 4840 MULTI–VANE AIR MOTORS
SPECIFICATIONS



Model	Max. Power		Speed at Max. Power	Free Speed ▲	Starting Torque		Stall Torque		Air Consumption at Max. Power		Weight	
	hp	kw	rpm	rpm	lb-ft	Nm	lb-ft	Nm	scfm	m^3/m	lb	kg
NON-REVERSIBLE Direction of rotation is counterclockwise when facing the shaft.												
4800D	3.8	2.83	5,250	9,850	5.8	7.8	7.7	10.4	98	2.77	15 1/4	6.92
4800K	3.7	2.76	821	1,538	35.3	47.8	47.0	63.7	95	2.69	15 1/4	6.92
4800M	3.7	2.76	560	1,050	51.0	69.2	69.0	93.6	95	2.69	15 1/4	6.92
4800N	3.7	2.76	387	726	75.0	102.0	100.0	136.0	95	2.69	15 1/4	6.92
4800P	3.5	2.61	260	510	98.0	133.0	131.0	178.0	95	2.69	19 3/4	8.96
4800Q	3.5	2.61	194	375	129.0	175.0	173.0	235.0	95	2.69	19 3/4	8.96
4800S	3.5	2.61	146	275	178.0	241.0	238.0	323.0	95	2.69	19 3/4	8.96
4800U	3.5	2.61	97	185	265.0	359.0	354.0	480.0	95	2.69	19 3/4	8.96
REVERSIBLE												
4840D	3.3	2.46	4,550	9,100	5.2	7.0	6.9	9.4	95	2.69	15 1/4	6.92
4840K	3.2	2.39	711	1,429	32.0	43.4	42.7	57.9	95	2.69	15 1/4	6.92
4840M	3.2	2.39	485	975	47.3	64.0	63.0	85.4	95	2.69	15 1/4	6.92
4840N	3.2	2.39	336	675	67.7	91.7	90.2	122.0	95	2.69	15 1/4	6.92
4840P	3.0	2.24	228	475	93.0	126.0	125.0	170.0	95	2.69	20 1/8	9.13
4840Q	3.0	2.24	167	350	123.0	167.0	165.0	224.0	95	2.69	20 1/8	9.13
4840S	3.0	2.24	125	255	161.0	218.0	215.0	292.0	95	2.69	20 1/8	9.13
4840U	3.0	2.24	83	170	225.0	305.0	300.0	407.0	95	2.69	20 1/8	9.13

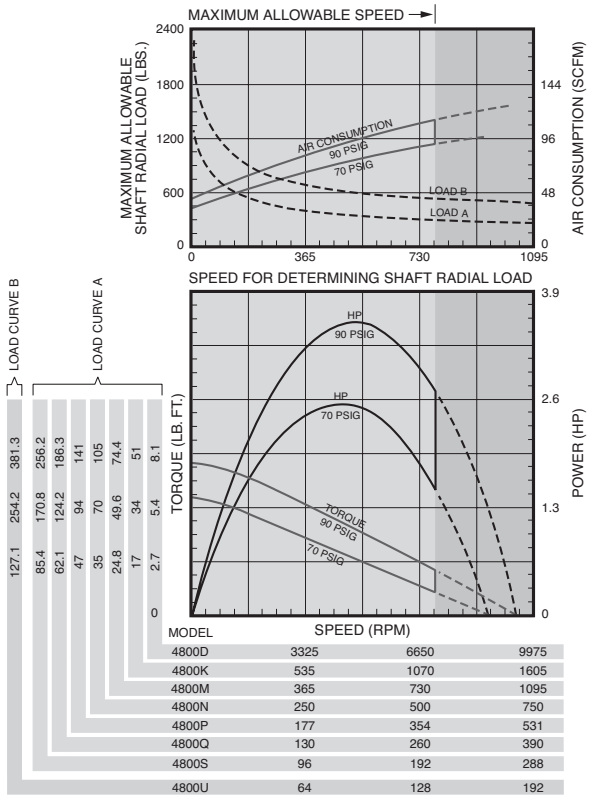

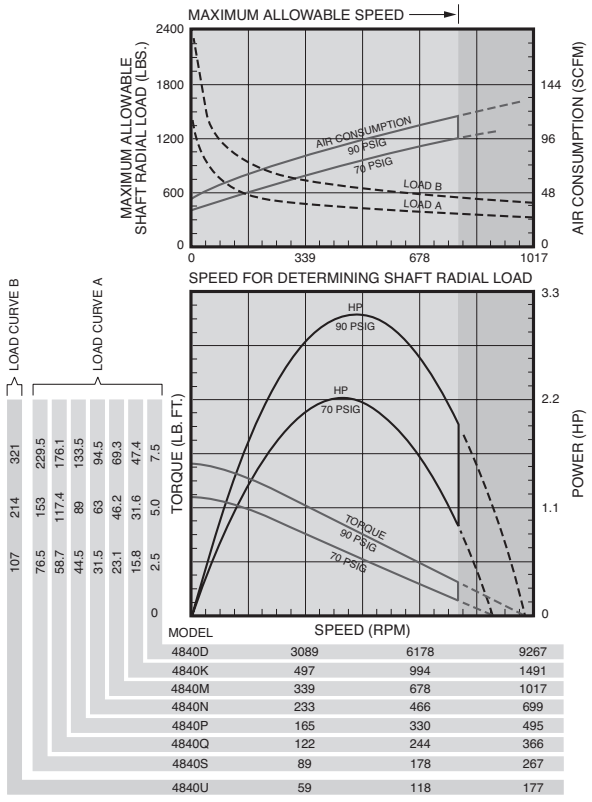

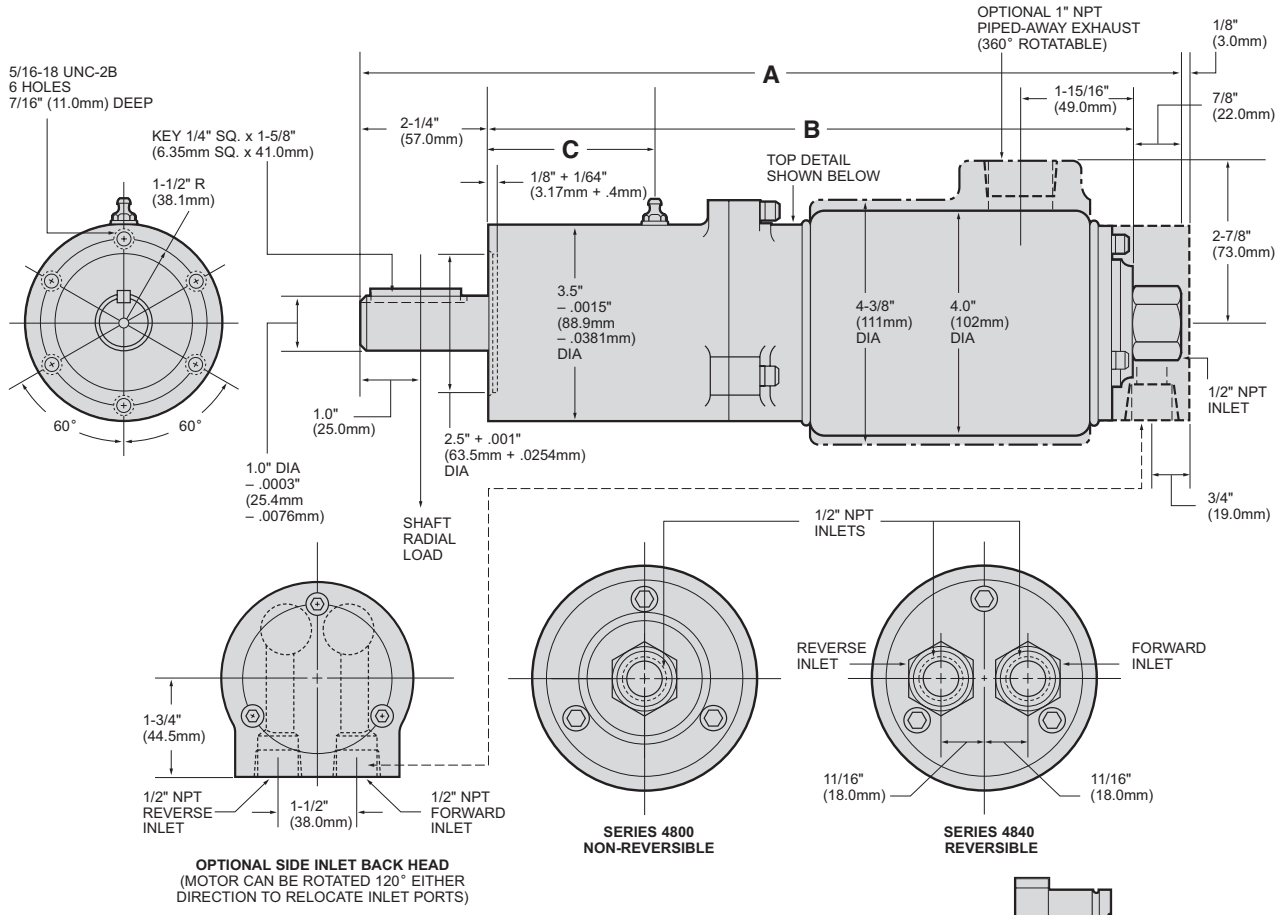

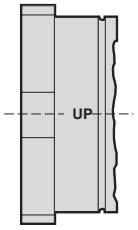

ASSEMBLE TO APPLICATION IN "UP" ORIENTATION FOR BEST STARTING CAPABILITY

TOP DETAIL

DIMENSIONS

Model	A		B		C	
	in	mm	in	mm	in	mm
4800D, 4800K, 4800M, 4800N 4840D, 4840K, 4840M, 4840N	12 1/8	308	9	229	29/32	23
4800P, 4800Q, 4800S, 4800U 4840P, 4840Q, 4840S, 4840U	14 1/2	368	11 3/8	289	2 7/8	73

EQUIPMENT OPTIONS

Furnished with Cataloged Models	Extra Options
6 Hole Face Mounting	R4800-A123 Exhaust Deflector Assembly with 1″ Pipe Tap ** R4901-102 Side Inlet Backhead Requires (3) 518-104 Screws
	* 5⁄8″ Square Drive Shaft on Gear Ratio: M Shaft Extension 1.38″ (35.5mm) * 3⁄4″ Square Drive Shaft on Gear Ratios: P, Q, S, U Shaft Extension 1.47″ (37.44mm)

*To order Motor with Square Drive Shaft, add the suffix “2” to the Model Number. Example: 4840Q2.
**Contact Ingersoll Rand for Model Number with these options.

SPUR GEAR, MULTI–VANE MOTORS

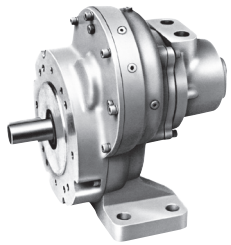

SERIES 17RA, 17RB, 34RA AND 34RB
SPECIFICATIONS

Model	Max. Power		Speed at Max. Power	Free Speed ▲	Starting Torque		Stall Torque		Air Consumption at Max. Power		Weight	
	hp	kw	rpm	rpm	lb-ft	Nm	lb-ft	Nm	scfm	m³/m	lb	kg
REVERSIBLE												
17RA005	2.3	1.72	562	1,110	24	32.5	37.0	50.2	103	2.92	40	18.1
17RA008	2.3	1.72	383	760	35	47.5	54.5	73.9	103	2.92	40	18.1
17RA011	2.3	1.72	254	505	53	71.9	82.0	111.0	103	2.92	40	18.1
17RA014	2.3	1.72	201	400	67	91.0	104.0	141.0	103	2.92	40	18.1
17RA017	2.3	1.72	169	335	80	109.0	124.0	168.0	103	2.92	40	18.1
17RA022	2.3	1.72	129	255	105	142.0	163.0	221.0	103	2.92	40	18.1
17RB029	2.2	1.64	97	187	120	163.0	201.0	273.0	100	2.83	72	32.7
17RB036	2.2	1.64	79	152	148	201.0	248.0	336.0	100	2.83	72	32.7
17RB045	2.2	1.64	62	121	187	254.0	312.0	423.0	100	2.83	72	32.7
17RB078	2.2	1.64	36	69	327	443.0	545.0	739.0	100	2.83	72	32.7
34RA005	4.1	3.06	560	1,080	41	60.0	69.0	93.6	183	5.18	43	19.5
34RA008	4.1	3.06	385	740	65	88.0	101.0	137.0	183	5.18	43	19.5
34RA011	4.1	3.06	255	490	98	133.0	152.0	206.0	183	5.18	43	19.5
34RA014	4.1	3.06	201	390	124	168.0	192.0	260.0	183	5.18	43	19.5
34RA017	4.1	3.06	168	325	148	201.0	229.0	311.0	183	5.18	43	19.5
34RA022	4.1	3.06	128	245	195	264.0	301.0	408.0	183	5.18	43	19.5
34RB029	4.0	2.98	99	187	224	304.0	374.0	507.0	180	5.1	75	34
34RB036	4.0	2.98	80	152	277	376.0	462.0	627.0	180	5.1	75	34
34RB045	4.0	2.98	63	121	348	472.0	581.0	788.0	180	5.1	75	34
34RB078	4.0	2.98	36	69	606	822.0	1,010.0	1,370.0	180	5.1	75	34

▲ ALL models must be operated with sufficient load to prevent speed from exceeding maximum allowable speed shown on performance curve. Performance figures are at 90 psig (620 kPa) air pressure.

SERIES 17RA, 17RB, 34RA AND 34RB

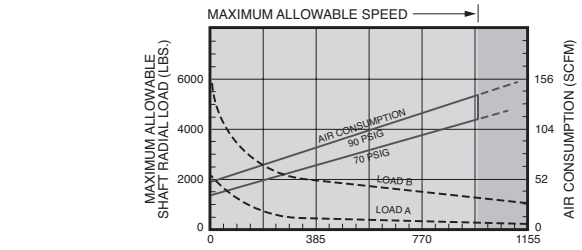

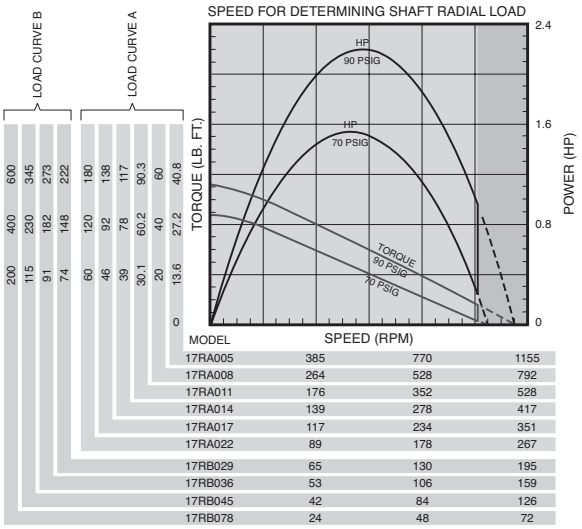

MODEL			
17RA005	385	770	1155
17RA008	264	528	792
17RA011	176	352	528
17RA014	139	278	417
17RA017	117	234	351
17RA022	89	178	267
17RB029	65	130	195
17RB036	53	106	159
17RB045	42	84	126
17RB078	24	48	72

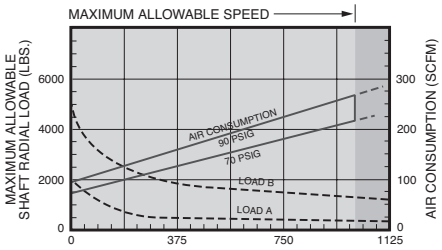

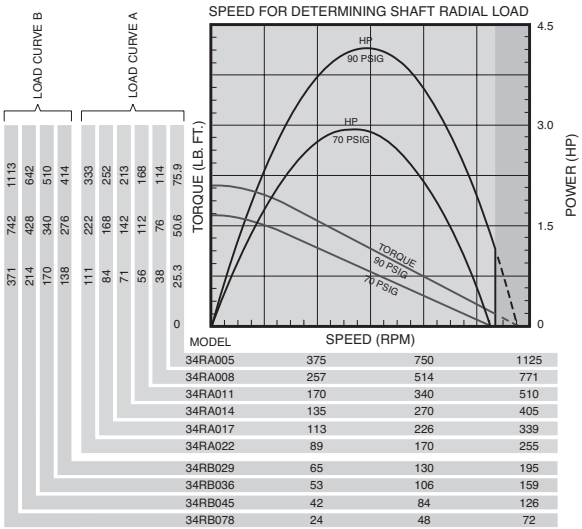

MODEL			
34RA005	375	750	1125
34RA008	257	514	771
34RA011	170	340	510
34RA014	135	270	405
34RA017	113	226	339
34RA022	89	170	255
34RB029	65	130	195
34RB036	53	106	159
34RB045	42	84	126
34RB078	24	48	72

SERIES 17RA, 17RB, 34RA AND 34RB MULTI–VANE AIR MOTORS
DIMENSIONS

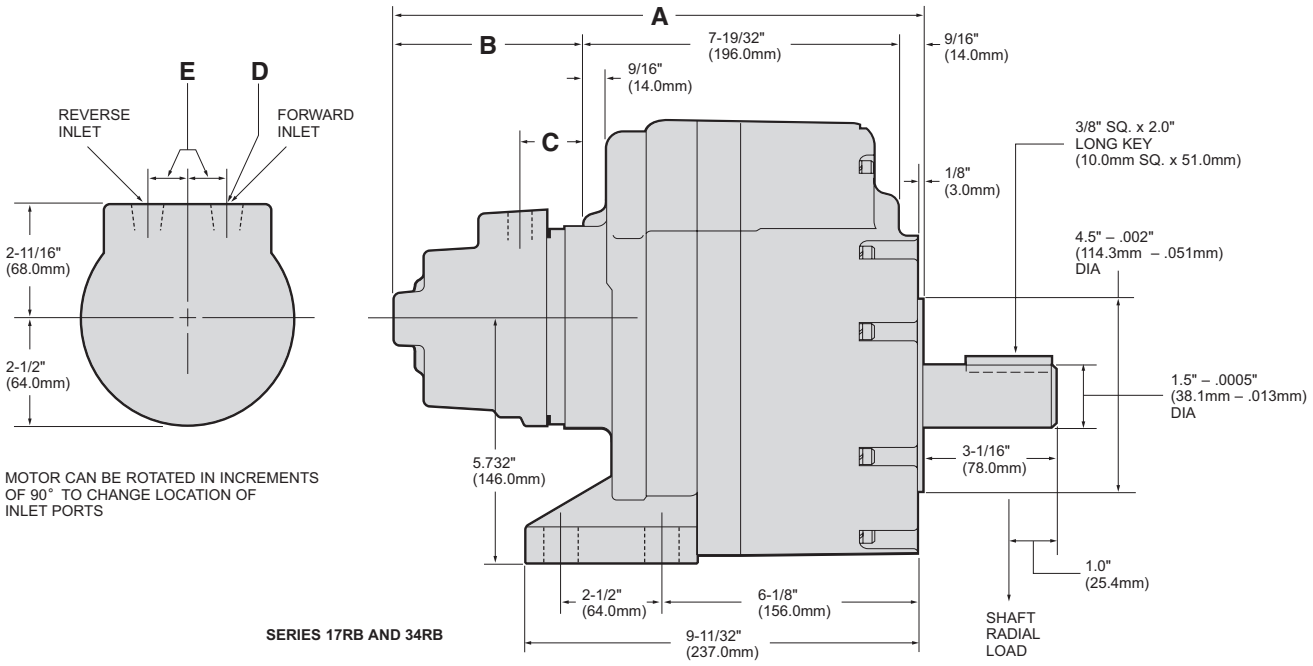

DIMENSIONS

Series	A		B		C		D	E	
	in	mm	in	mm	in	mm	NPT	in	mm
17RB	$13^{1}/_{16}$	332	$4^{29}/_{32}$	125	$2^{3}/_{16}$	56	3/8	7/8	22
34RB	$14^{13}/_{16}$	376	$6^{21}/_{32}$	169	$2^{9}/_{32}$	58	1/2	$1^{3}/_{16}$	30

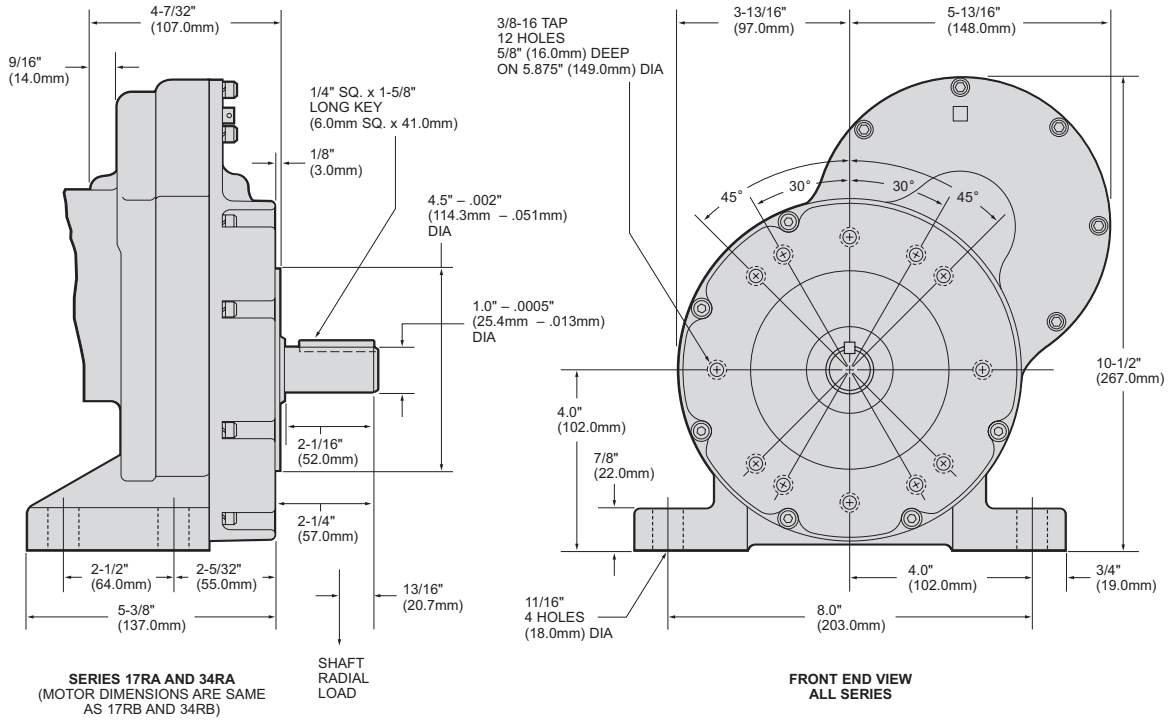

SERIES 48RA AND 48RB MULTI–VANE AIR MOTORS
SPECIFICATIONS

Model	Max. Power		Speed at Max. Power	Free Speed ▲	Starting Torque		Stall Torque		Air Consumption at Max. Power		Weight	
	hp	kw	rpm	rpm	lb-ft	Nm	lb-ft	Nm	scfm	m³/m	lb	kg
REVERSIBLE												
48RA005	3.1	2.31	930	1,690	26	35.3	35	47.5	95	2.69	44	20
48RA008	3.1	2.31	638	1,160	38	51.5	51.5	69.8	95	2.69	44	20
48RA011	3.1	2.31	423	772	57	77.3	77.3	105	95	2.69	44	20
48RA014	3.1	2.31	332	612	72	97.6	97.6	133	95	2.69	44	20
48RA017	3.1	2.31	278	511	86	117	117	159	95	2.69	44	20
48RA022	3.1	2.31	213	390	113	153	154	209	95	2.69	44	20
48RB029	3	2.24	162	292	135	183	189	256	90	2.55	75	34
48RB036	3	2.24	131	236	167	227	234	317	90	2.55	75	34
48RB045	3	2.24	105	188	209	283	295	400	90	2.55	75	34
48RB078	3	2.24	60	108	364	494	513	696	90	2.55	75	34

▲ ALL models must be operated with sufficient load to prevent speed from exceeding maximum allowable speed shown on performance curve. Performance figures are at 90 psig (620 kPa) air pressure.

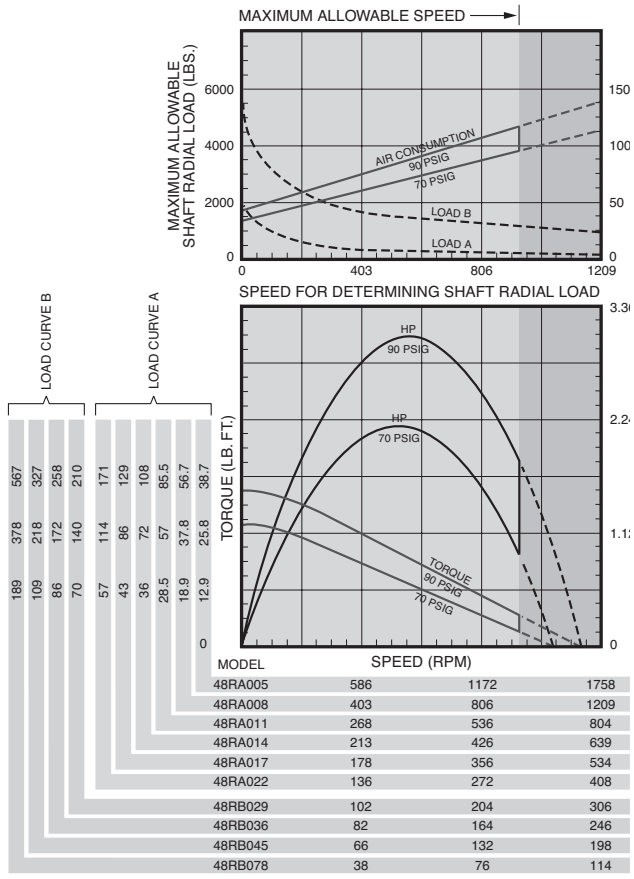

EQUIPMENT OPTIONS

Furnished with Cataloged Models

Side Inlet Backhead

Extra Options

R4840-102 Rear Inlet Backhead

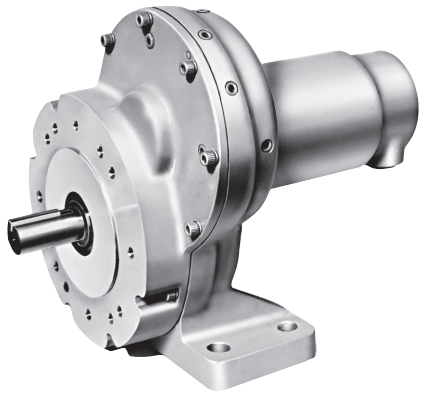

SERIES 48RA AND 48RB MULTI–VANE AIR MOTORS

DIMENSIONS

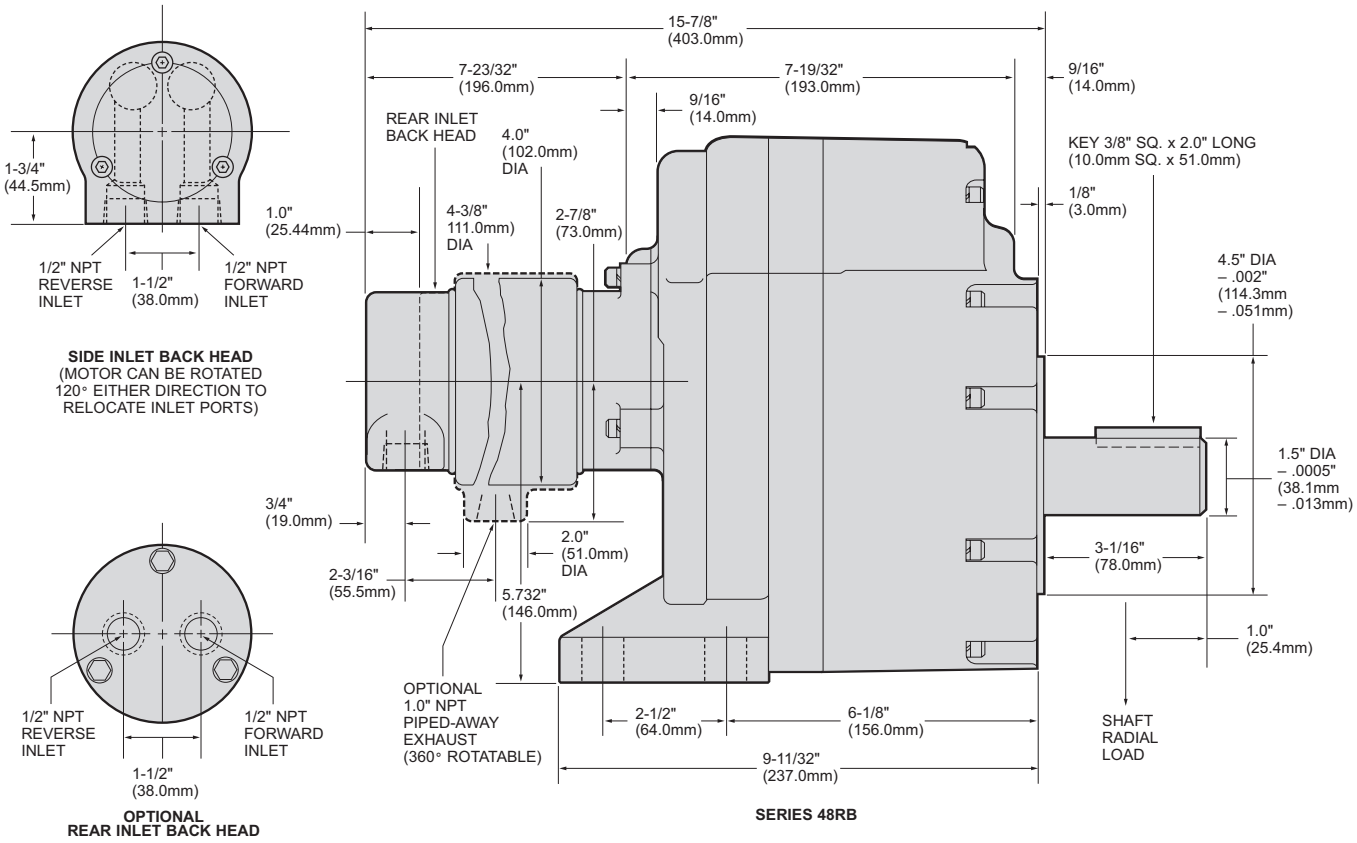

SIDE INLET BACK HEAD
(MOTOR CAN BE ROTATED
120° EITHER DIRECTION TO
RELOCATE INLET PORTS)

OPTIONAL
REAR INLET BACK HEAD

SERIES 48RB

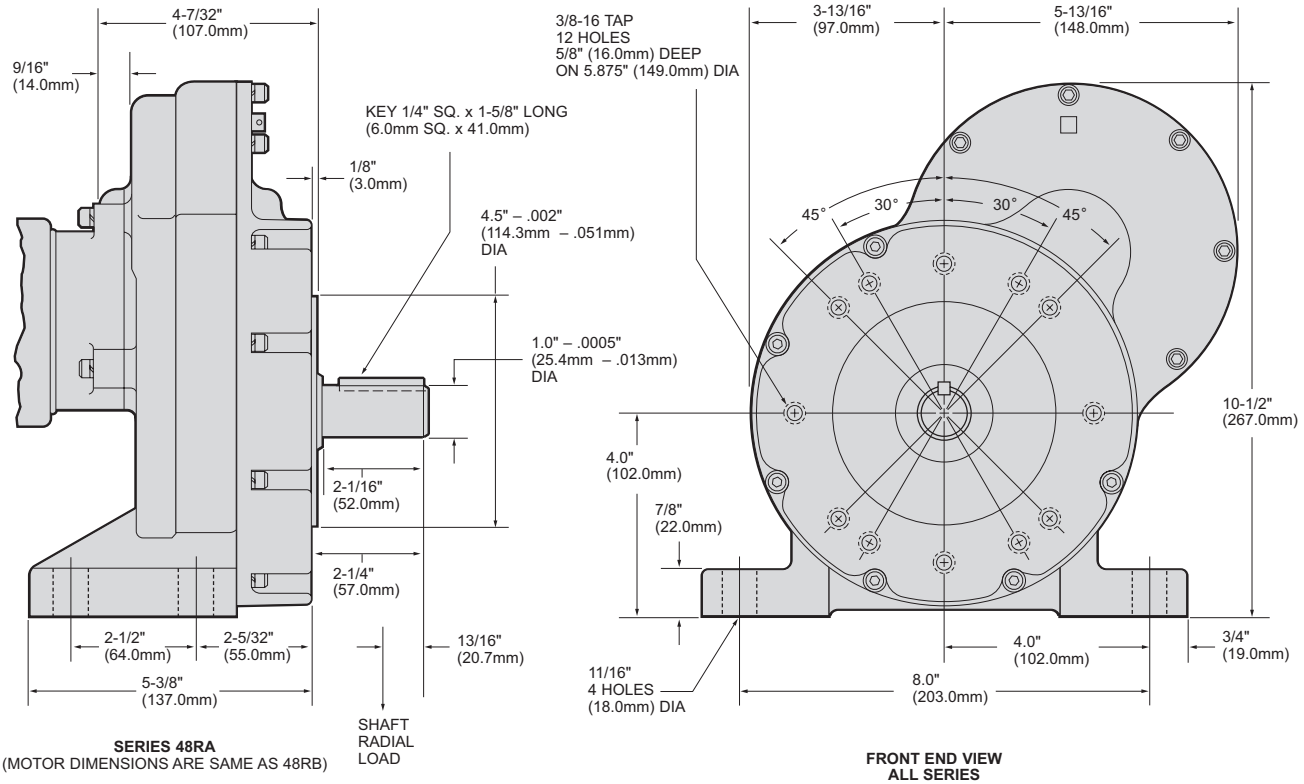

SERIES 48RA
(MOTOR DIMENSIONS ARE SAME AS 48RB)

FRONT END VIEW
ALL SERIES

SERIES 92RA AND 92RB MULTI–VANE AIR MOTORS

SPECIFICATIONS

Model	Max. Power		Speed at Max. Power	Free Speed ▲	Starting Torque		Stall Torque		Air Consumption at Max. Power		Weight	
	hp	kw	rpm	rpm	lb-ft	Nm	lb-ft	Nm	scfm	m^3/m	lb	kg
REVERSIBLE												
92RA005	8.15	6.08	910	1,390	56	75.9	75	102	230	6.51	46	20.9
92RA008	8.15	6.08	620	1,296	80	109	109	148	230	6.51	46	20.9
92RA011	8.15	6.08	415	852	120	163	164.5	223	230	6.51	46	20.9
92RA014	8.15	6.08	327	682	152	206	208	282	230	6.51	46	20.9
92RA017	8.15	6.08	274	571	180	244	248	336	230	6.51	46	20.9
92RA022	8.15	6.08	209	435	235	319	326	442	230	6.51	46	20.9
92RB029	7.9	5.89	160	327	280	380	402	545	225	6.37	78	35.4
92RB036	7.9	5.89	130	264	345	468	497	674	225	6.37	78	35.4
92RB045	7.9	5.89	103	210	440	597	626	849	225	6.37	78	35.4
92RB078	7.9	5.89	59	120	770	1,044	1,090	1,478	225	6.37	78	35.4

▲ ALL models must be operated with sufficient load to prevent speed from exceeding maximum allowable speed shown on performance curve. Performance figures are at 90 psig (620 kPa) air pressure.

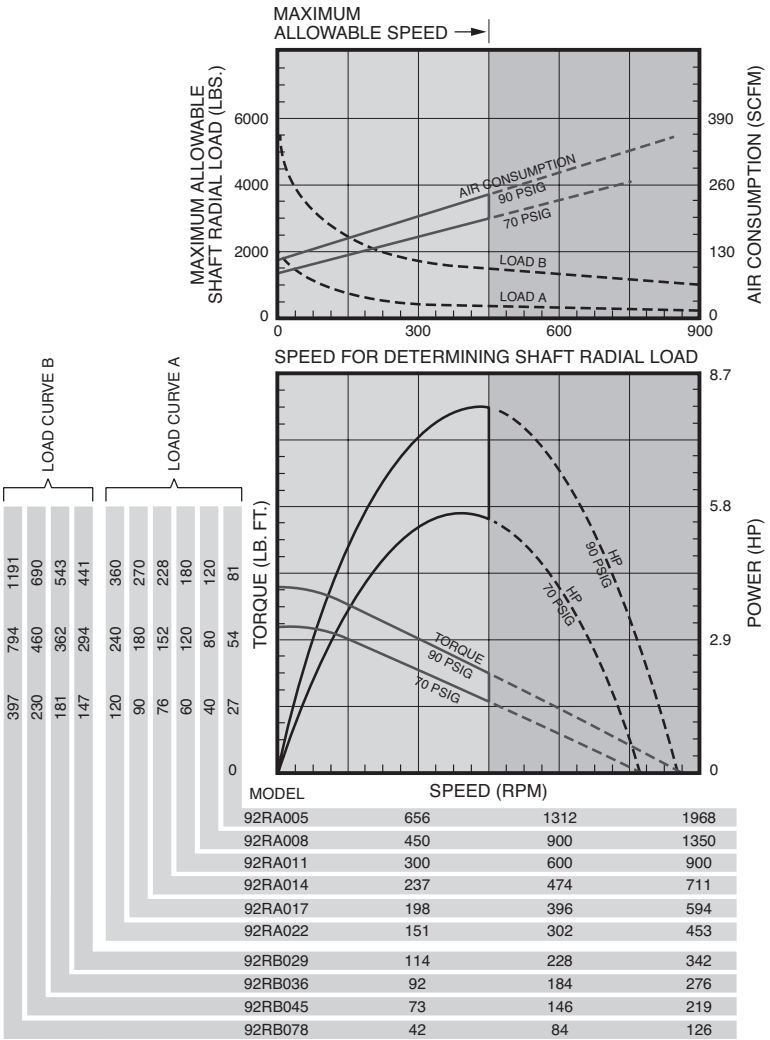

MODEL			
92RA005	656	1312	1968
92RA008	450	900	1350
92RA011	300	600	900
92RA014	237	474	711
92RA017	198	396	594
92RA022	151	302	453
92RB029	114	228	342
92RB036	92	184	276
92RB045	73	146	219
92RB078	42	84	126



SERIES 92RA AND 92RB MULTI–VANE AIR MOTORS
DIMENSIONS

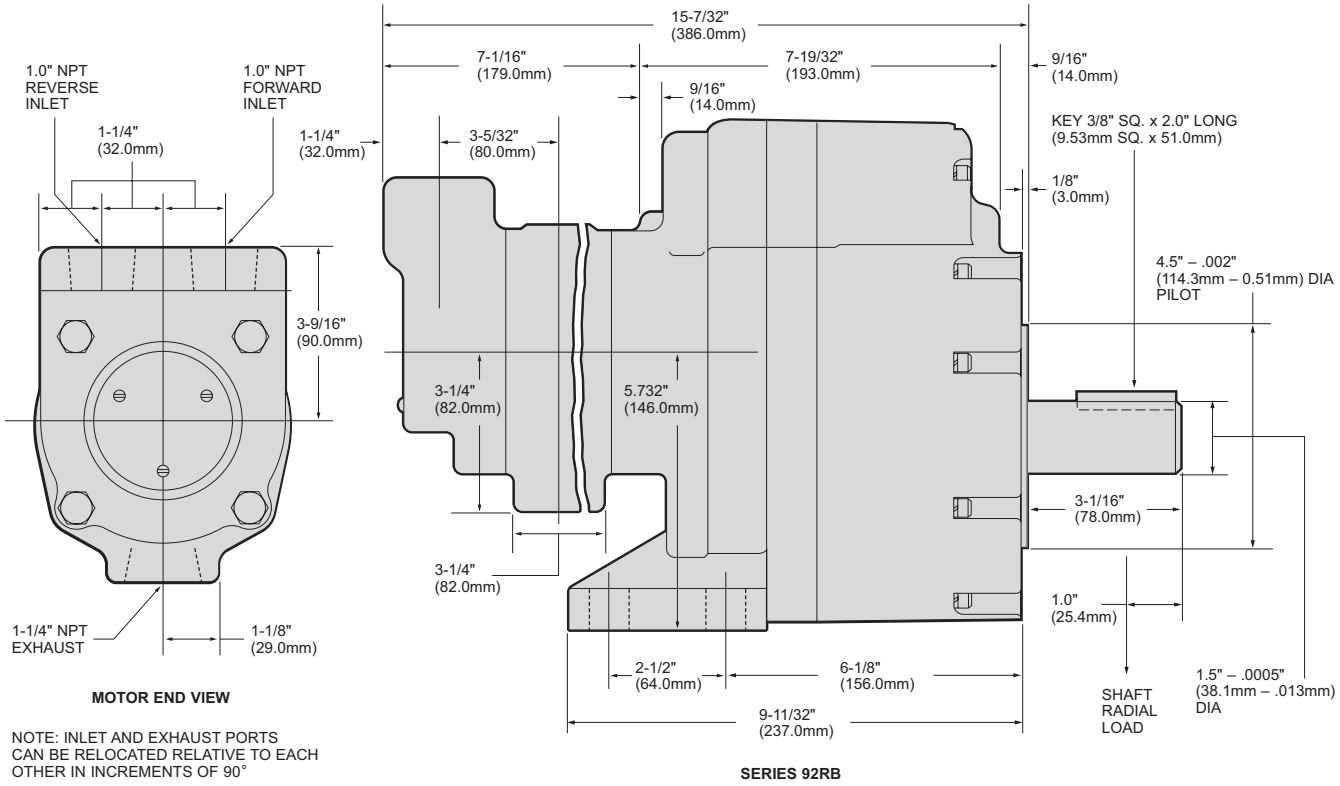

MOTOR END VIEW

NOTE: INLET AND EXHAUST PORTS CAN BE RELOCATED RELATIVE TO EACH OTHER IN INCREMENTS OF 90°

SERIES 92RB

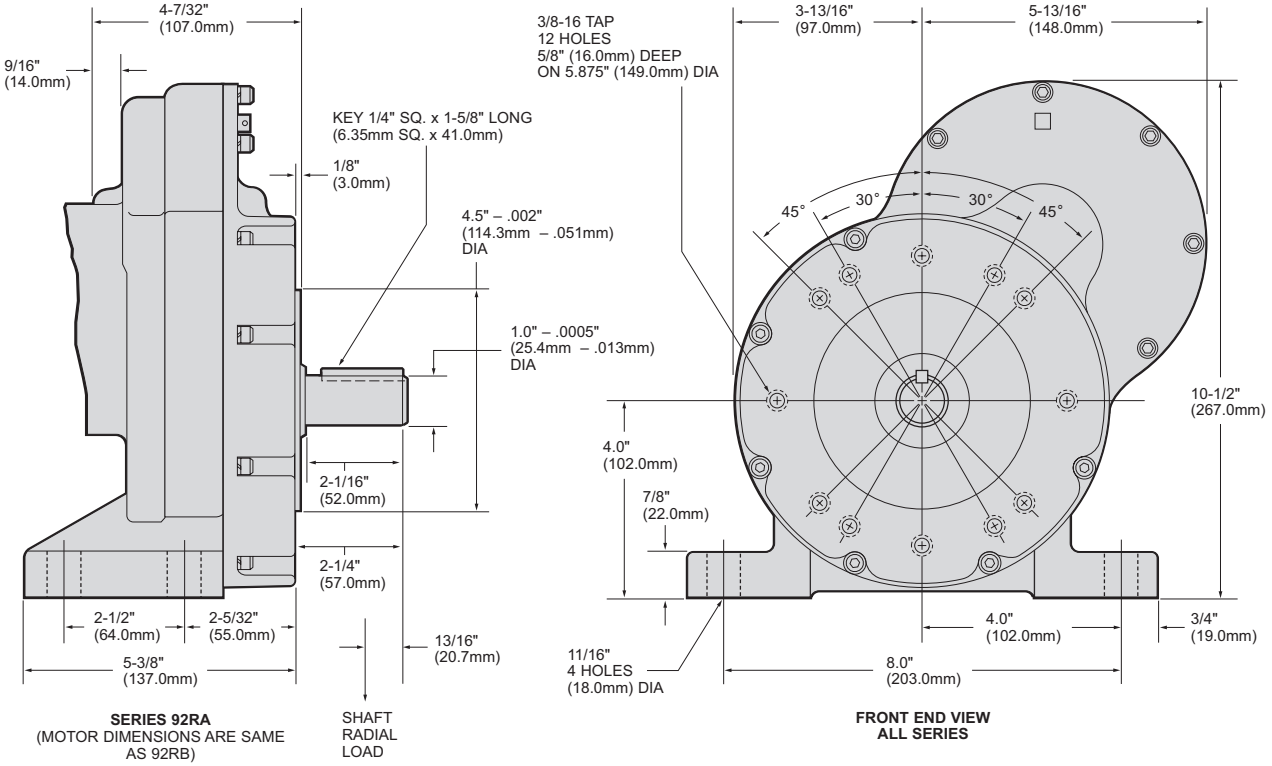

SERIES 92RA
(MOTOR DIMENSIONS ARE SAME AS 92RB)

FRONT END VIEW ALL SERIES

SERIES 92RM AND 992RB MULTI–VANE AIR MOTORS
SPECIFICATIONS

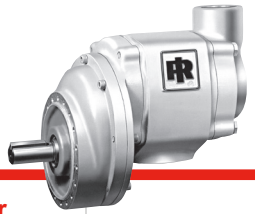

Model	Max. Power		Speed at Max. Power	Free Speed ▲	Starting Torque		Stall Torque		Air Consumption at Max. Power		Weight	
	hp	kw	rpm	rpm	lb-ft	Nm	lb-ft	Nm	scfm	m^3/m	lb	kg
NON-REVERSIBLE Direction of rotation is counterclockwise when facing the shaft												
92RM1	9.9	7.38	2,095	3,980	33	44.7	45	61	240	6.79	24 1/4	11
92RM2	9.9	7.38	2,095	3,980	33	44.7	45	61	240	6.79	24 1/4	11
REVERSIBLE												
992RM1	8.15	6.08	1,730	3,600	28.7	38.9	39	52.9	230	6.51	25 1/4	11.3

▲ ALL models must be operated with sufficient load to prevent speed from exceeding maximum allowable speed shown on performance curve.
Performance figures are at 90 psig (620 kPa) air pressure.
Direction of rotation of Model 92RM1 rotates clockwise and Model 92RM2 rotates counterclockwise when facing the shaft end of the motor.

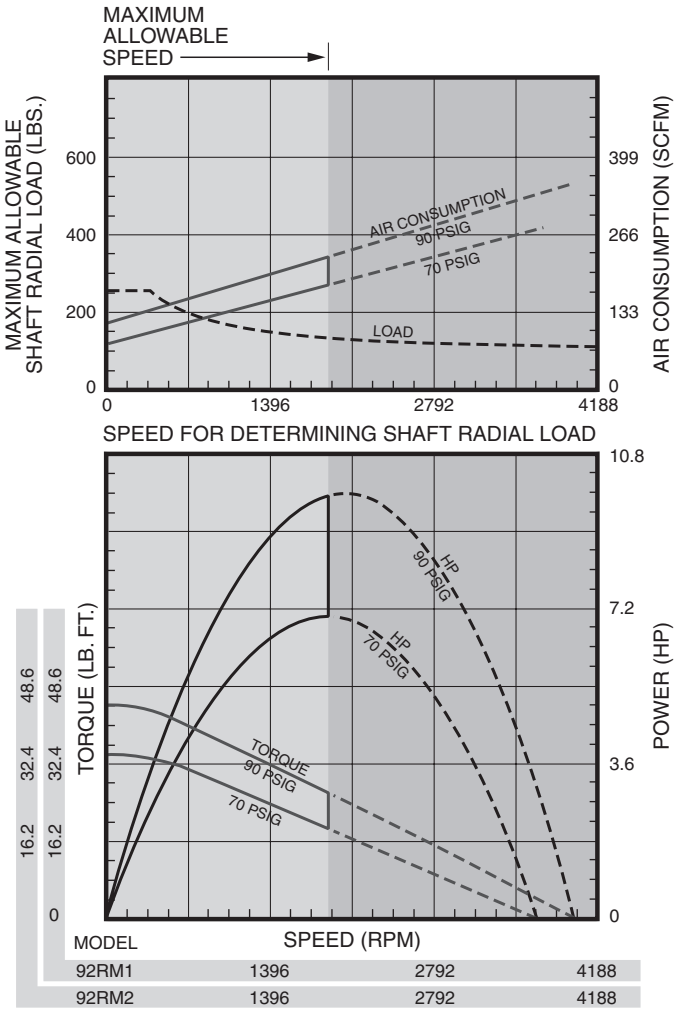

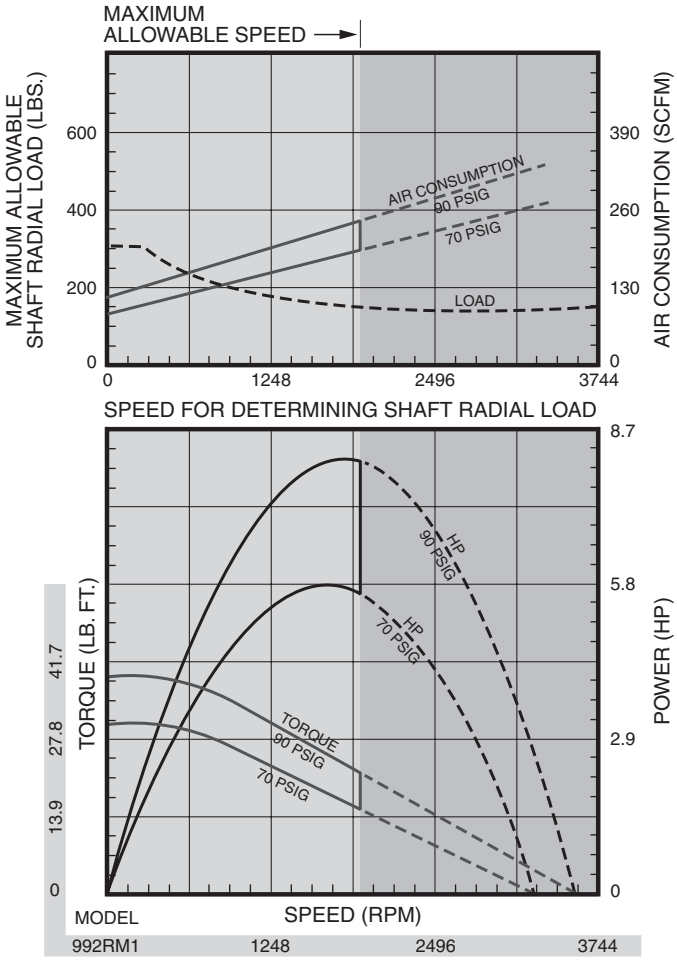

SERIES 92RM AND 992RM MULTI–VANE AIR MOTORS

DIMENSIONS

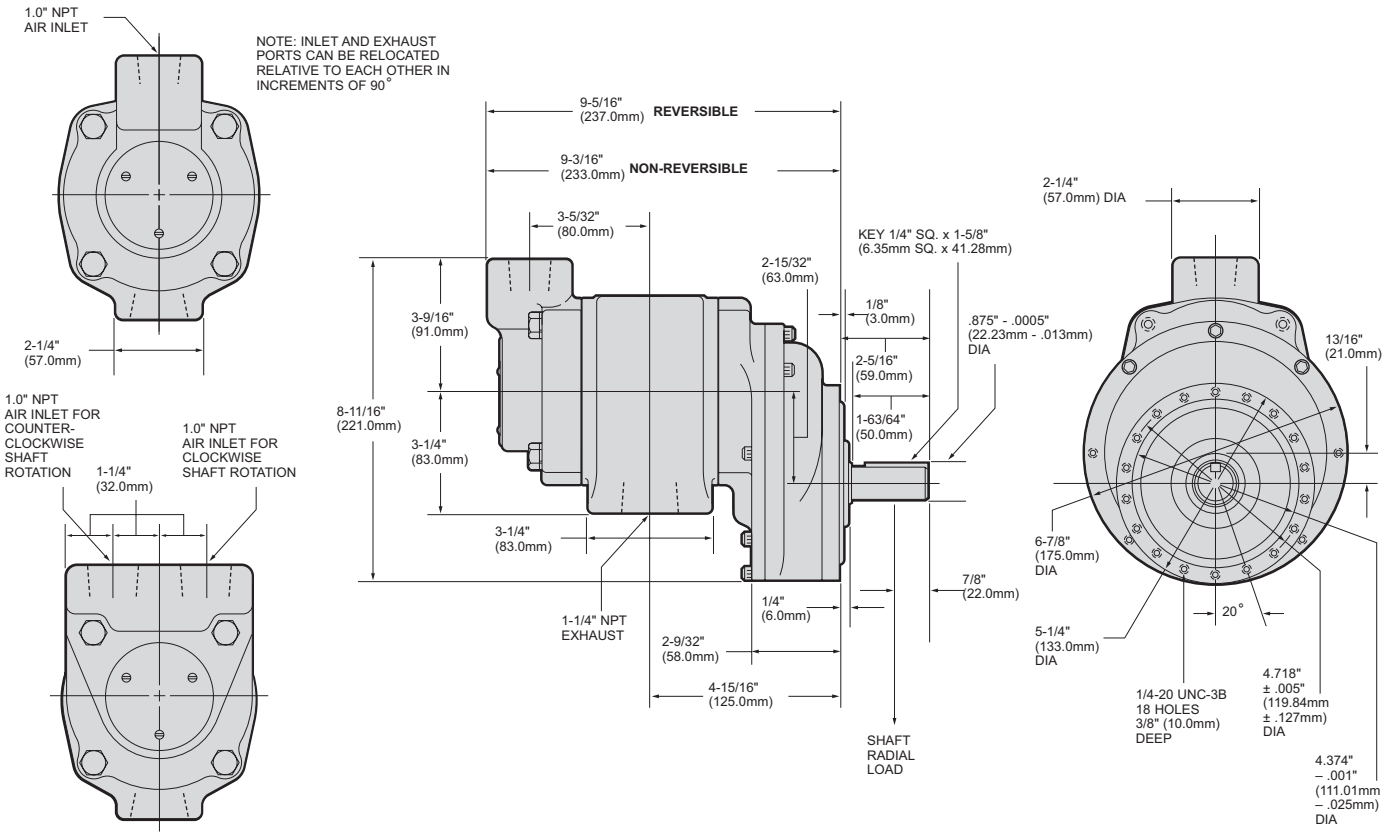

DIRECT DRIVE MULTI–VANE MOTORS

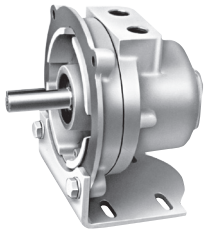

SERIES MVA AND M0V0
SPECIFICATIONS

Model*	Max. Power		Speed at Max. Power	Free Speed ▲	Starting Torque		Stall Torque		Air Consumption at Max. Power		Weight	
	hp	kw	rpm	rpm	lb-ft	Nm	lb-ft	Nm	scfm	m^3/m	lb	kg
REVERSIBLE												
MVA017A	1.93	1.44	2,800	5,450	4.5	6.1	7	9.5	76	2.15	12½	5.67
MVA017B	1.93	1.44	2,800	5,450	4.5	6.1	7	9.5	76	2.15	12½	5.67
MVA034A	4.15	3.09	3,000	6,250	8.3	11.3	12.8	17.4	181	5.12	16½	7.48
MVA034B	4.15	3.09	3,000	6,250	8.3	11.3	12.8	17.4	181	5.12	16½	7.48
MOV075AA	10.5	7.8	2,600	5,600	22.5	30.5	30	40.7	260	7.36	64	29

▲ ALL models must be operated with sufficient load to prevent speed from exceeding maximum allowable speed shown on performance curve. Performance figures are at 90 psig (620 kPa) air pressure.
*"A" suffix denotes foot mount model, "B" suffix denotes flange mount models.

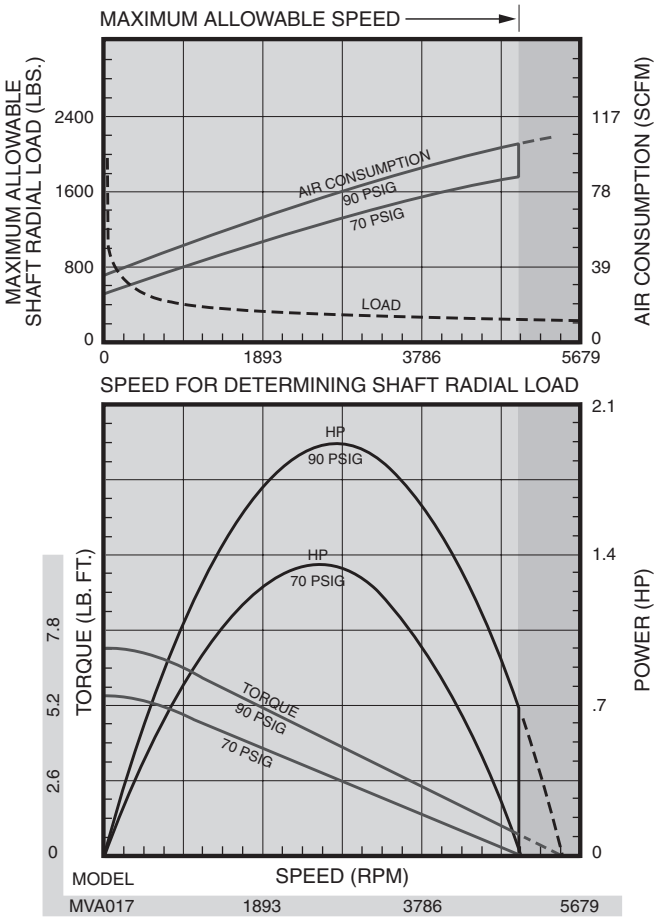

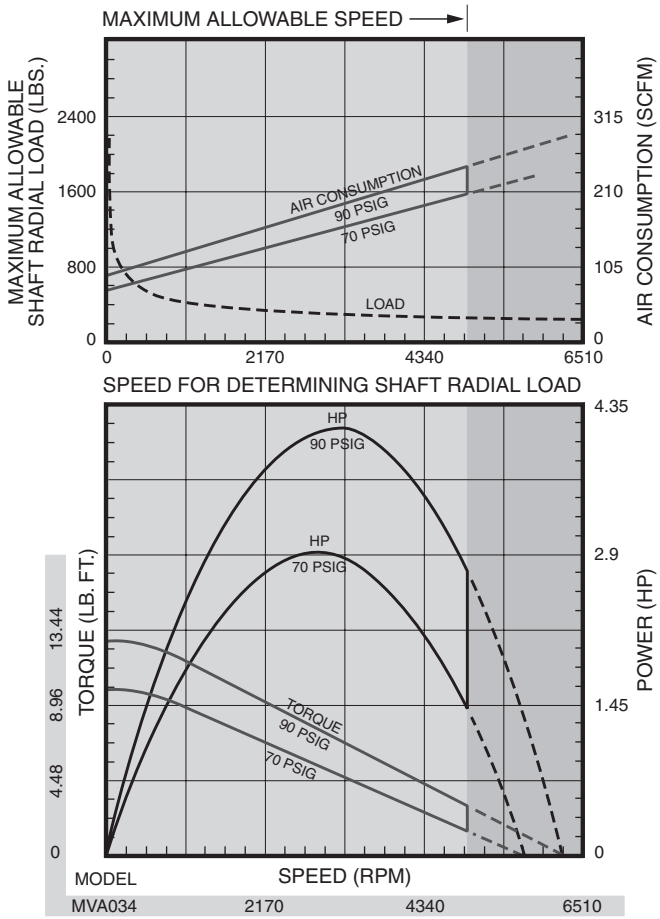

DIMENSIONS

Series	A		B		C	D		E		F DIA.	
	in	mm	in	mm	NPT	in	mm	in	mm	in	mm
MVA017	$6^{11}/_{16}$	170	7/8	22	3/8	$1^{7}/_{8}$	48	$2^{1}/_{2}$	64	0.6250 0.6245	15.88 15.86
MVA034	$8^{7}/_{16}$	214	$1^{3}/_{16}$	30	1/2	1	51	$2^{5}/_{8}$	67	0.8750 0.8745	22.23 22.21

SERIES MVA DIMENSIONS

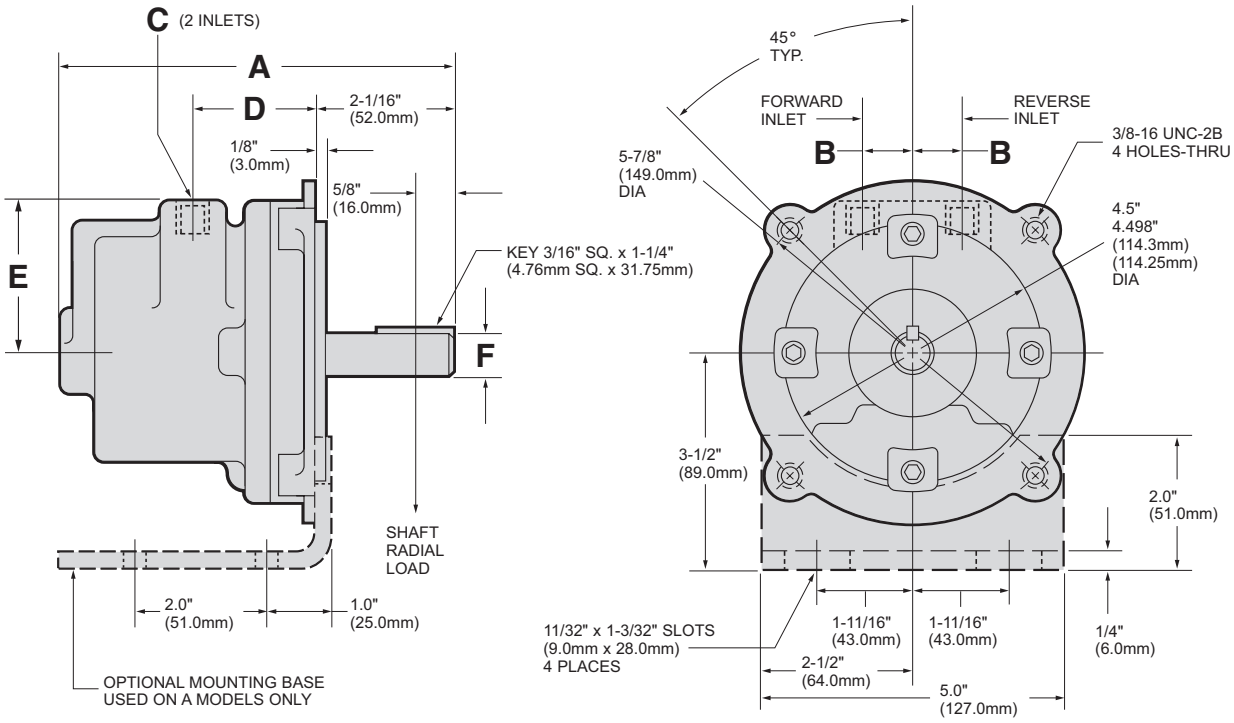

MODEL M0V075AA DIMENSIONS

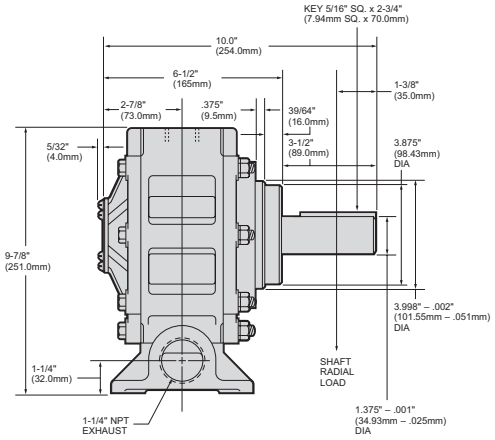

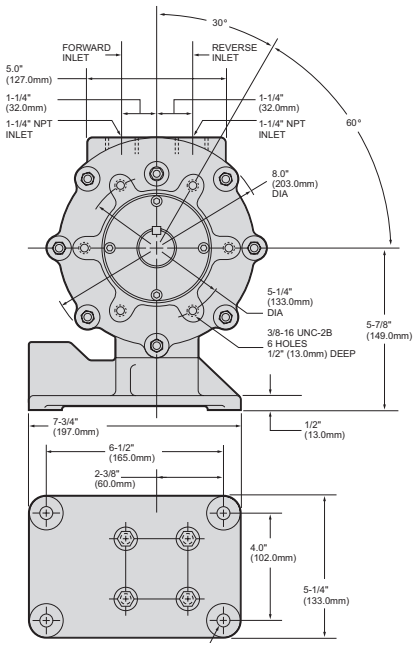

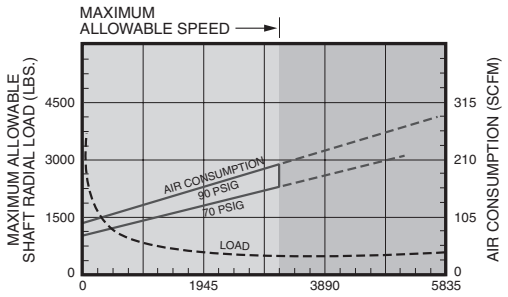

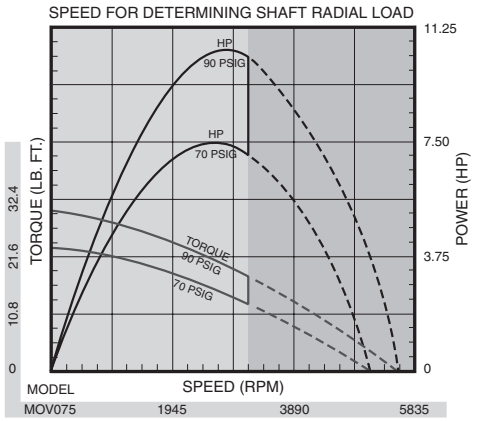

EQUIPMENT OPTIONS

Models	Furnished with Cataloged Models	Standard Options
MVA017A	Foot Mounting*	
MVA017B	NEMA C Face 56C Frame Size	MVA008-K4 Mounting Foot Kit
MVA034A	Foot Mounting**	MOV010AA-674 Muffler
MVA034B	NEMA C Face 182C Frame Size	MVA008-K4 Mounting Foot Kit MOV010AA-674 Muffler
MOV075AA	Foot/6 Hole Face Mounting	150BM-A674 Muffler

* Removal of Foot Mounting results in Motor having NEMA C Face Mounting, 56C Frame Size.
** Removal of Foot Mounting results in Motor having NEMA C Face Mounting, 182C Frame Size.

SERIES SELECT LUBE FREE MULTI–VANE AIR MOTOR
SPECIFICATIONS



Model	Max. Power		Speed at Max. Power*	Free Speed*	Starting Torque		Stall Torque		Air Consumption at Max. Power		Weight	
	hp	kw	rpm	rpm	lb-ft	Nm	lb-ft	Nm	scfm	m^3/m	lb	kg
REVERSIBLE												
SM1AMA	0.33	0.25	7,600	15,200	0.29	0.39	0.38	0.52	17	0.5	1.5	0.7
SM1AMAL	0.33	0.25	7,600	15,200	0.29	0.39	0.38	0.52	17	0.5	1.5	0.7
SM1UPC	0.60	0.37	6,000	12,500	0.45	0.6	0.6	0.81	42	1.2	1.75	0.8
SM1UPCL	0.60	0.37	6,000	12,500	0.45	0.6	0.6	0.81	42	1.2	1.75	0.8
SM1UPCR	0.60	0.37	6,000	12,500	0.45	0.6	0.6	0.81	42	1.2	1.75	0.8
SM2AMAN	0.88	0.66	3,000	8,070	1.7	2.3	2.3	3.1	48	1.4	7.5	3.4
SM2AMC	0.88	0.66	3,000	8,070	1.7	2.3	2.3	3.1	48	1.4	7.5	3.4
SM4AMAN	1.5	1.1	3,000	7,900	2.6	3.5	4.1	5.6	67	1.9	8.25	3.7
SM4AMB	1.5	1.1	3,000	7,900	2.6	3.5	4.1	5.6	67	1.9	8.25	3.7
SM6AMA	3.6	2.7	3,000	7,900	5.3	7.2	8.7	11.8	120	3.5	16.25	7.4
SM6AMAN	3.6	2.7	3,000	7,900	5.3	7.2	8.7	11.8	120	3.4	16.25	7.4
SM8AMA	4.8	3.6	2,500	7,000	10	13.6	14	19	152	4.3	22.5	10.2
SM8AMAN	4.8	3.6	2,500	7,000	10	13.6	14	19	152	4.3	22.5	10.2

* Note: Maximum allowable rpm as shown on the power curve for each model.

MODEL DESIGNATION BREAKOUT

SM ↑ Select Series Air Motor	2AM ↑ Power Series	A ↑ Shaft/Interface	↑ Rotation	N ↑ Mounting
	1AM 1UP 2AM 4AM 6AM 8AM	A = Round shaft w/ square key (Round shaft on SM1AM series) B = Round shaft with Woodruff Key (#3) C = Round shaft with flat on the shaft	L = Left Hand Bias (CCW)* R = Right Hand Bias (CW) None = Reversible *when facing shaft	N = NEMA mount None = Face or Footmount (Footmount is an optional accessory)

EQUIPMENT OPTIONS

Series	Furnished with Cataloged Models	Optional Accessories
SM1AM	Hub Mounting Muffler	SM1AM-AG587 Footmount
SM1UP	Hub Mounting Muffler	SM1AM-AG587 Footmount
SM2AM	3 Hole Face Mounting Muffler NEMA 56C Flange with Model SM2AMAN	SM2AM-AH636 Footmount
SM4AM	3 Hole Face Mounting Muffler NEMA 56C Flange with Model SM4AMAN	SM4AM-AH634 Footmount
SM6AM	3 Hole Face Mounting Muffler NEMA 56C Flange with Model SM6AMAN	SM6AM-AH634 Footmount
SM8AM	4 Hole Face Mounting Muffler NEMA 182C Flange, 184C Flange Mount with Model SM8AMAN	SM8AM-AH640 Footmount

INTERCHANGE CHART

GAST Model Style	Rotation Bias	FENNER Model Style	IR SELECT Series Model (w/ Foot Bracket	Max. Power (hp)	Max. Free Speed (rpm)	Mounting Style
1AM-NCC-12	Left Hand (CCW)		SM1AMAL	0.33	15,200	Hub Mount
1AM-NCW-14	Left Hand (CCW)		SM1AMA	0.33	15,200	Hub Mount
1AM-NRV-39A	Reversible		SM1AMA	0.33	15,200	Hub Mount
1AM-NRV-63A	Reversible		SM1AMA	0.33	15,200	Hub Mount
1UP-NCC-1A	Left Hand (CCW)		SM1UPCL	0.60	12,500	Hub Mount
1UP-NCW-2A	Left Hand (CCW)		SM1UPCR	0.60	12,500	Hub Mount
1UP-NRV-3A	Reversible	V1X	SM1UPC	0.60	12,500	Hub Mount
1UP-NRV-10	Reversible		SM1UPC	0.60	12,500	Hub Mount
AG585	1AM Foot Mount Bracket		(SM1AM-AG587)			
2AM-NCC-16	Left Hand (CCW)	2VMX/CCW	SM2AMC	0.88	8,070	Hub or Face Mount
2AM-NCC-16F	Left Hand (CCW)		SM2AMC	0.88	8,070	Hub or Face Mount
2AM-NCW-7A	Right Hand (CW)	2VMX/CW	SM2AMC	0.88	8,070	Hub or Face Mount
2AM-NCW-7B	Right Hand (CW)		SM2AMC	0.88	8,070	Hub or Face Mount
2AM-NRV-89	Reversible	VA2X	SM2AMC	0.88	8,070	Hub or Face Mount
2AM-FCC-1	Left Hand (CCW)	2VMJ/CCW	SM2AMC (w/ SM2AM-AH636)	0.88	8,070	Foot Mount
2AM-FCW-13	Right Hand (CW)	2VMJ/CW	SM2AMC (w/ SM2AM-AH636)	0.88	8,070	Foot Mount
2AM-FRV-501	Reversible	VA2J	SM2AMC (w/ SM2AM-AH636)	0.88	8,070	Foot Mount
2AM-NCC-43A	Left Hand (CCW)	2VMC/CCW	SM2AMAN	0.88	8,070	NEMA 56C Mount
	Right Hand (CW)	2VMC/CW	SM2AMAN	0.88	8,070	NEMA 56C Mount
2AM-NRV-90	Reversible	VA2C	SM2AMAN	0.88	8,070	NEMA 56C Mount
	Left Hand (CCW)	4VMX/CCW	SM4AMB	1.5	7,900	Hub or Face Mount
	Right Hand (CW)	4VMX/CCW	SM4AMB	1.5	7,900	Hub or Face Mount
4AM-NRV-22B	Reversible	VA4X	SM4AMB	1.5	7,900	Hub or Face Mount
4AM-NRV-22F	Reversible		SM4AMB	1.5	7,900	Hub or Face Mount
4AM-NRV-54A	Reversible		SM4AMB	1.5	7,900	Hub or Face Mount
	Left Hand (CCW)	4VMJ/CCW	SM4AMB (w/ SM4AM-AH634)	1.5	7,900	Foot Mount
	Right Hand (CW)	4VMJ/CW	SM4AMB (w/ SM4AM-AH634)	1.5	7,900	Foot Mount
4AM-FRV-13C	Foot Mount	VA4J	SM4AMB (w/ SM4AM-AH634)	1.5	7,900	Foot Mount
4AM-FRV-13H	Foot Mount		SM4AMB (w/ SM4AM-AH634)	1.5	7,900	Foot Mount
4AM-FRV-63A	Foot Mount		SM4AMB (w/ SM4AM-AH634)	1.5	7,900	Foot Mount
	Left Hand (CCW)	4VMC/CCW	SM4AMAN	1.5	7,900	NEMA 56C Mount
	Right Hand (CW)	4VMC/CW	SM4AMAN	1.5	7,900	NEMA 56C Mount
4AM-NRV-50C	Reversible	VA4C	SM4AMAN	1.5	7,900	NEMA 56C Mount
4AM-NRV-70C	Reversible		SM4AMAN	1.5	7,900	NEMA 56C Mount
6AM-NRV-7A	Reversible	VA6X	SM6AMA	3.6	7,900	Face Mount
6AM-FRV-5A	Reversible	VA6J	SM6AMA (w/ SM6AM-AH634)	3.6	7,900	Face Mount
6AM-FRV-23A	Reversible		SM6AMA (w/ SM6AM-AH634)	3.6	7,900	Face Mount
6AM-NRV-11A	Reversible	VA6C	SM6AMAN	3.6	7,900	NEMA 56C Mount
6AM-NRV-22A	Reversible		SM6AMAN	3.6	7,900	NEMA 56C Mount
8AM-NRV-5B	Reversible	VA8X	SM8AMA	4.8	7,000	Face Mount
8AM-NRV-42A	Reversible		SM8AMA	4.8	7,000	Face Mount
8AM-FRV-2B	Reversible	VA8J	SM8AMA (w/ SM8AM-AH640)	4.8	7,000	Foot Mount
8AM-FRV-30A	Reversible		SM8AMA (w/ SM8AM-AH640)	4.8	7,000	Foot Mount
8AM-NRV-28A	Reversible	VA8C	SM8AMAN	4.8	7,000	NEMA 145TC Mount
8AM-NRV-32A	Reversible		SM8AMAN	4.8	7,000	NEMA 145TC Mount

Note: All Select Series motors are provided in our Lube Free Four Vane design.

SM1AM AND SM1AM–AG587 LUBE FREE MULTI–VANE AIR MOTORS FOOTMOUNT

DIMENSIONS

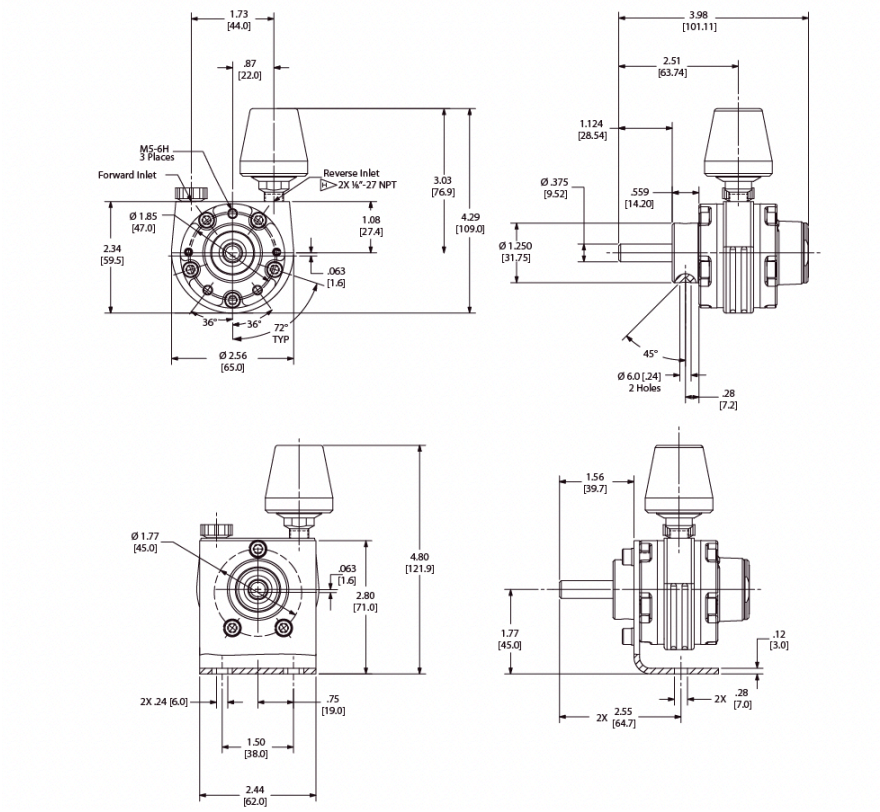

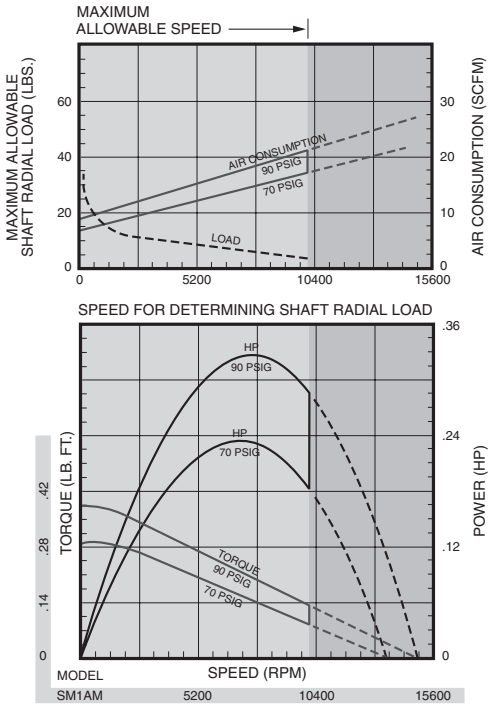

SM1UP AND SM1AM–AG587 LUBE FREE MULTI–VANE AIR MOTORS FOOTMOUNT

DIMENSIONS

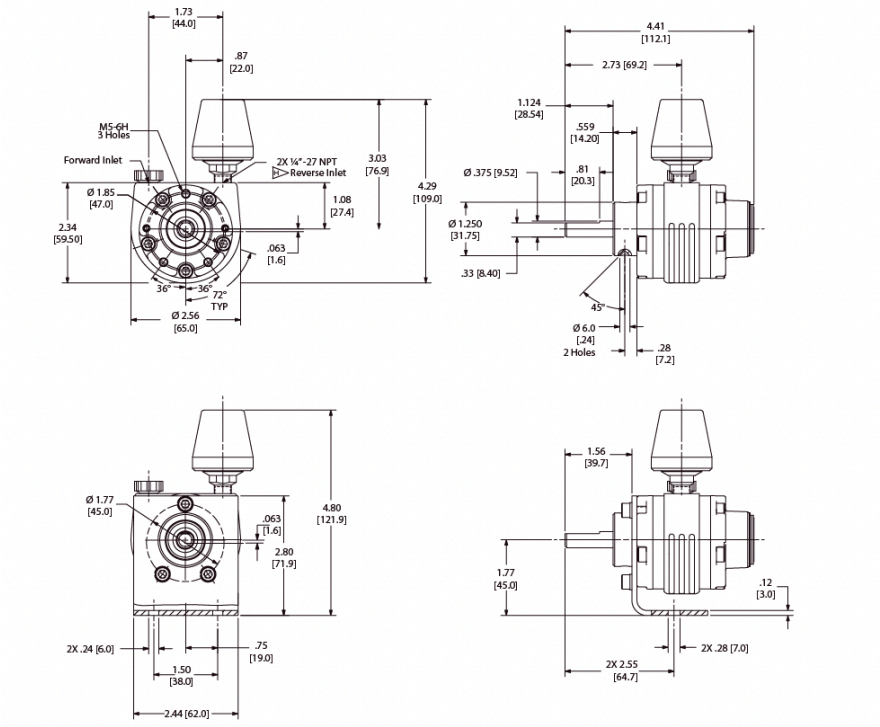

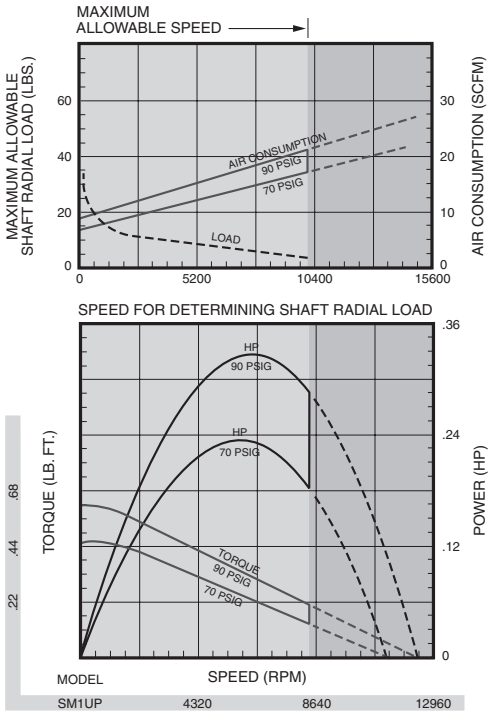

SM2AMC AND SM2AM–AH636 LUBE FREE MULTI–VANE AIR MOTORS FOOTMOUNT

DIMENSIONS

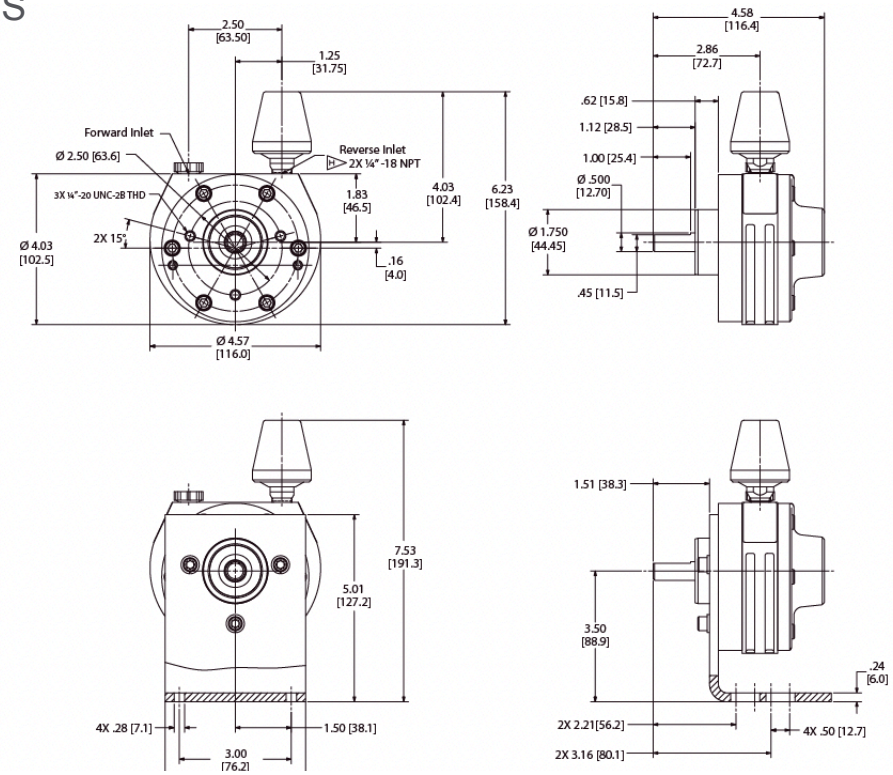

SM2AMAN LUBE FREE MULTI–VANE AIR MOTORS NEMA MOUNT

DIMENSIONS

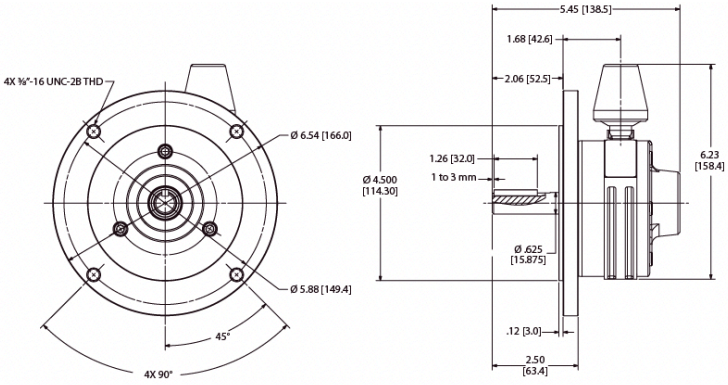

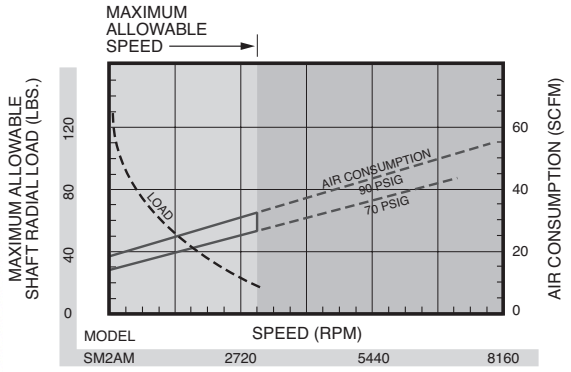

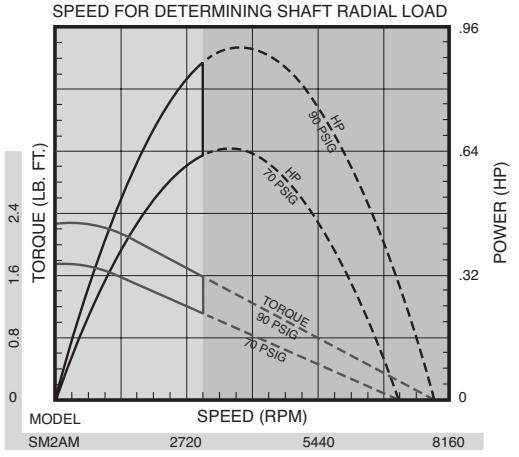

SM4AMB AND SM4AM–AH634 LUBE FREE MULTI–VANE AIR MOTORS FOOTMOUNT DIMENSIONS

DIMENSIONS

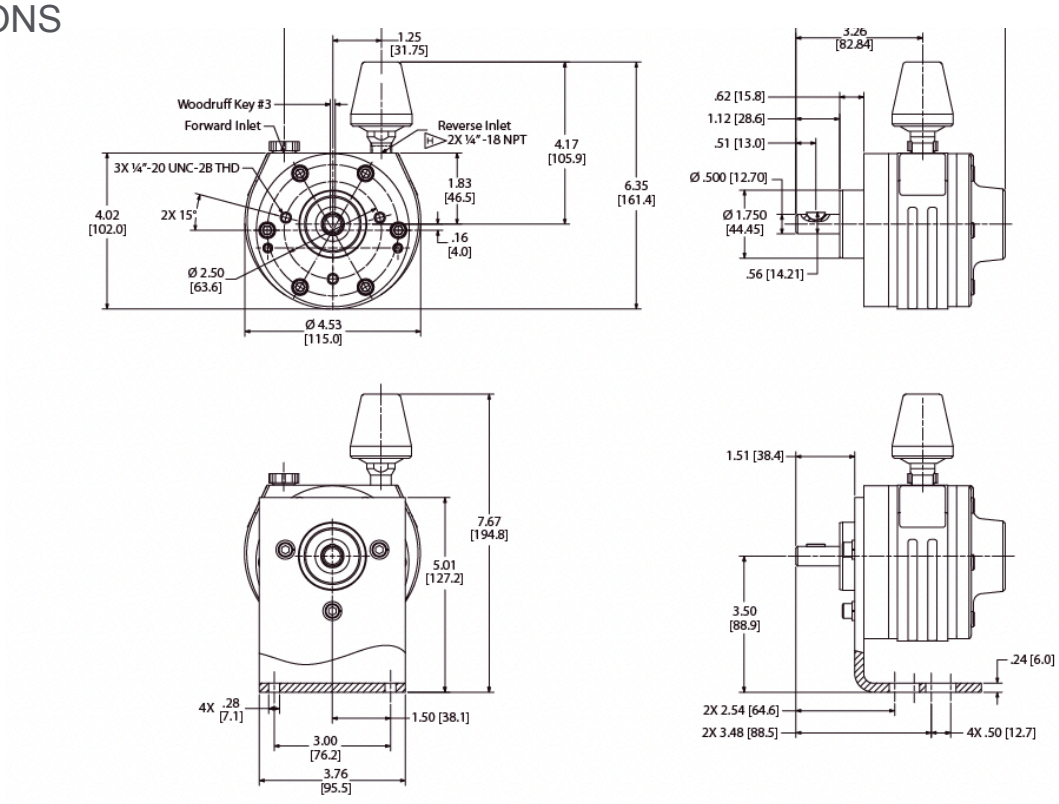

SM4AMAN LUBE FREE MULTI–VANE AIR MOTORS NEMA MOUNT

DIMENSIONS

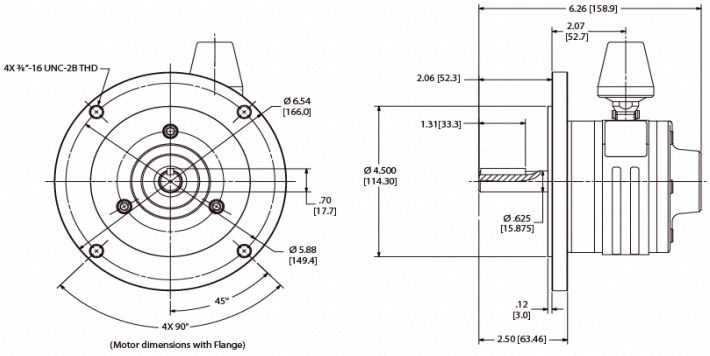

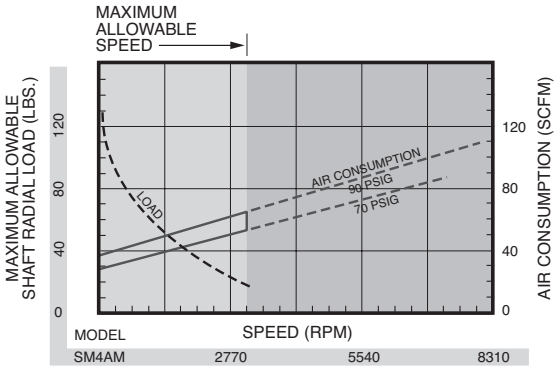

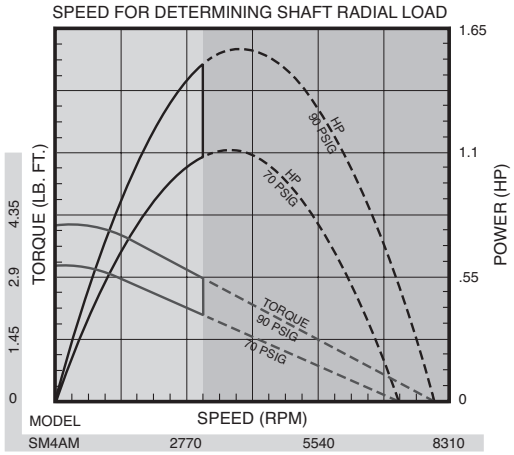

SM6AMA AND SM6AM-AH634 LUBE FREE MULTI–VANE AIR MOTORS FOOTMOUNT

DIMENSIONS

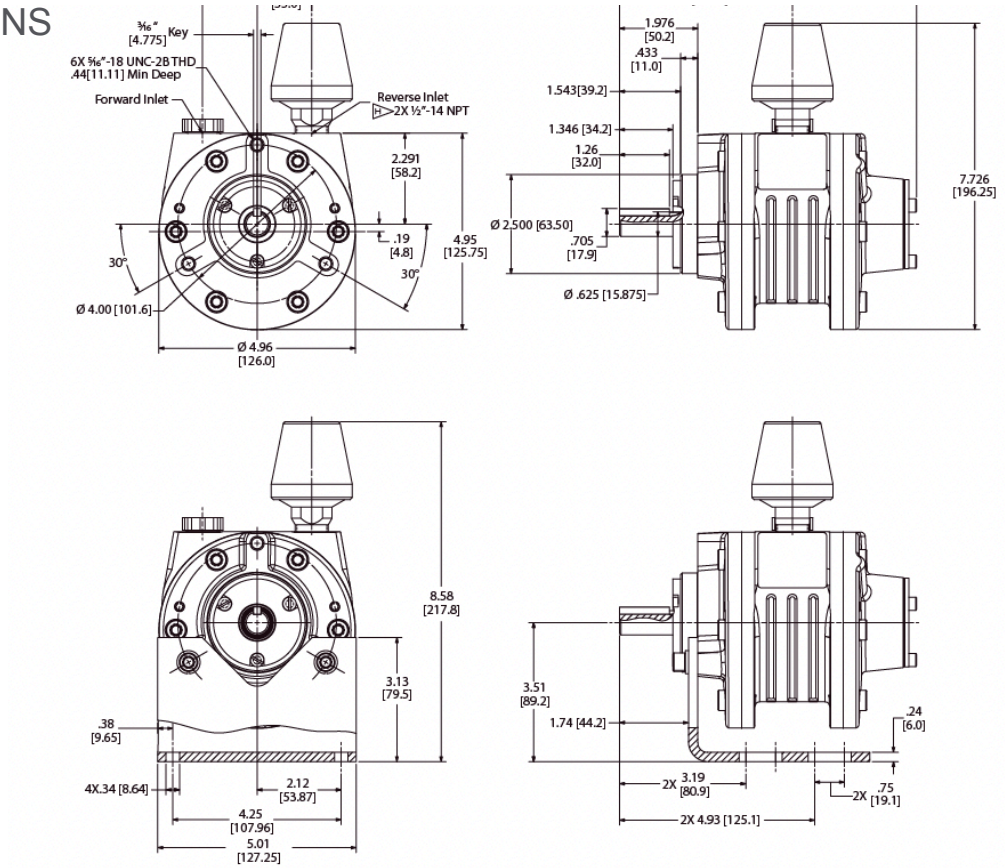

SM6AMAN LUBE FREE MULTI–VANE AIR MOTORS NEMA MOUNT

DIMENSIONS

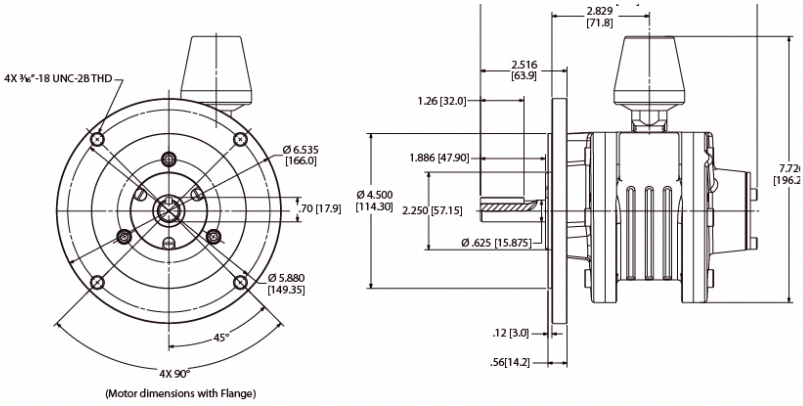

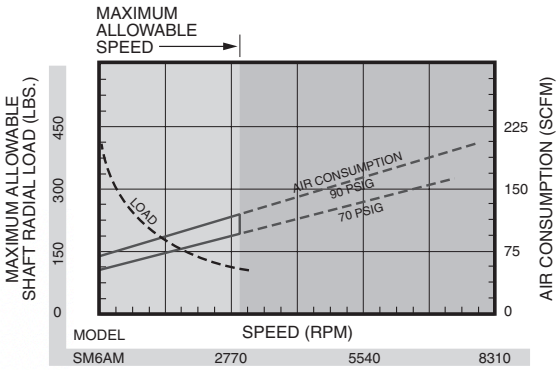

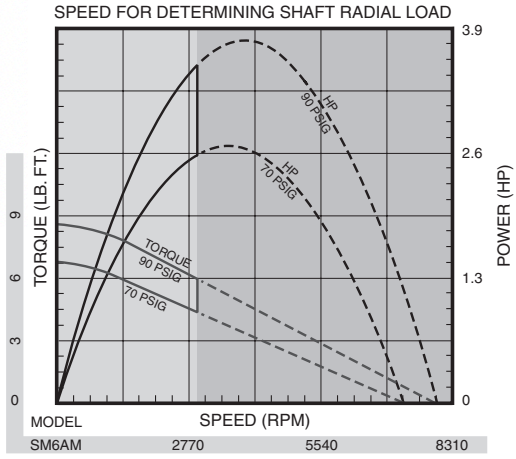

SM8AMA AND SM8AM–AH640 LUBE FREE MULTI–VANE AIR MOTORS FOOTMOUNT

DIMENSIONS

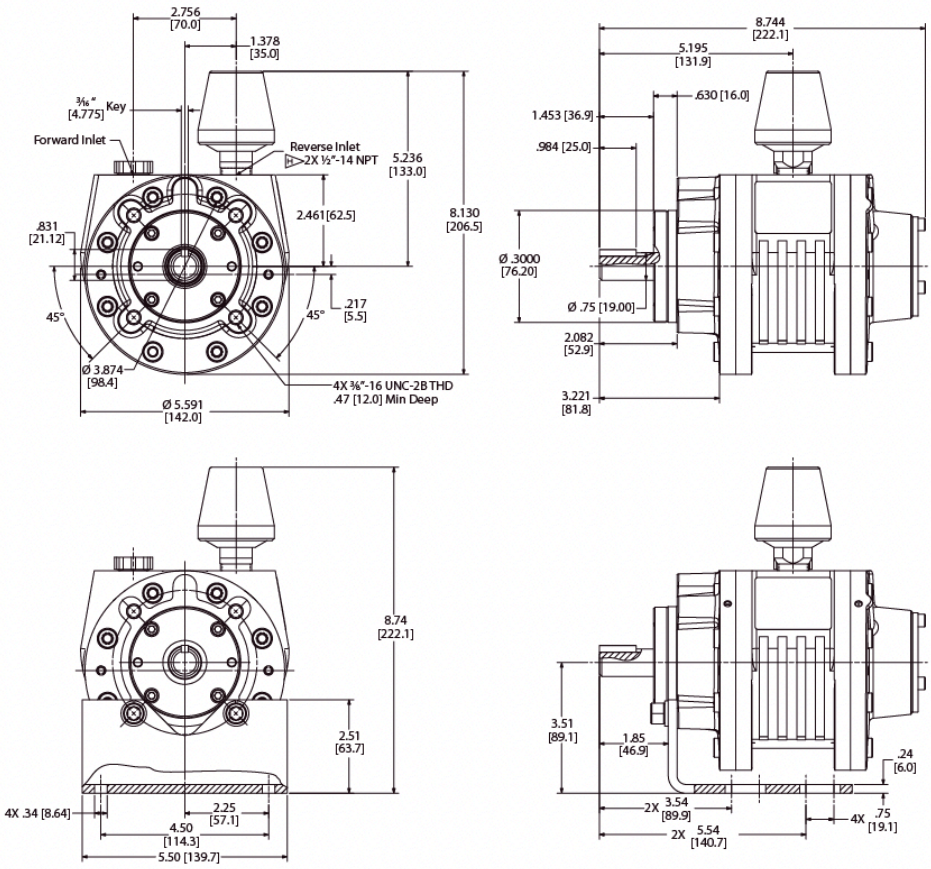

SM8AMAN LUBE FREE MULTI–VANE AIR MOTORS NEMA MOUNT

DIMENSIONS

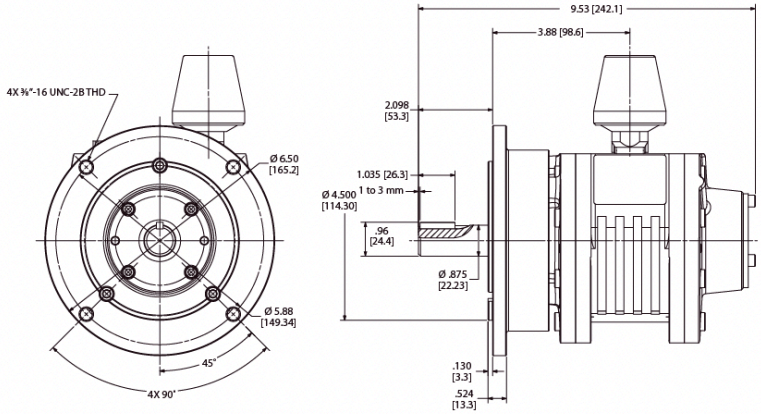

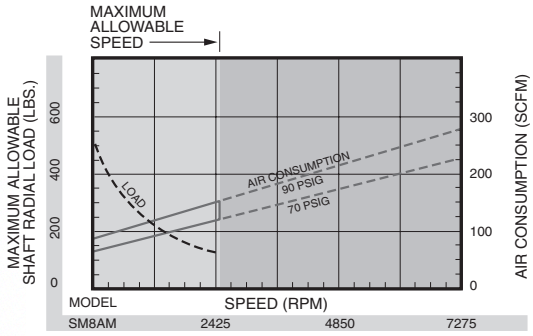

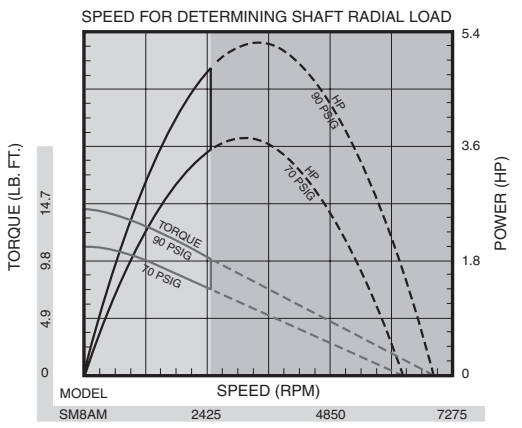

ROTARY–VANE PNEUMATIC MILLING AND SAWING MOTORS

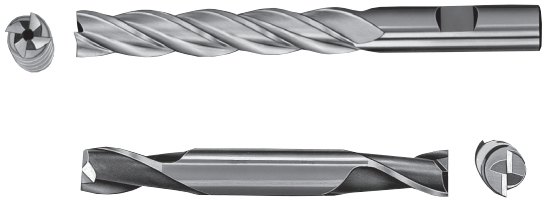

FIGURE 1

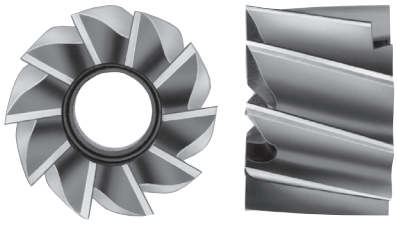

FIGURE 2



FIGURE 3





FIGURE 4

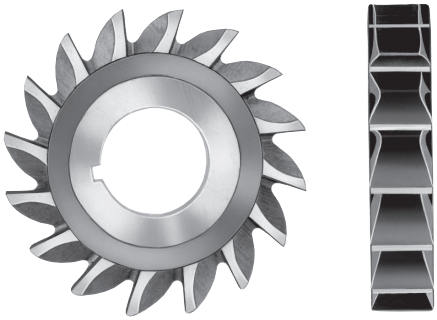

FIGURE 5

ARO milling and sawing motors have been used on such diverse applications as milling screw slots in molded fiberglass and straddle milling a 3/4″ hex shape on round bar stock. For cost reduction in secondary machining, it is feasible to install a mill motor on the cross-slide of a machine to mill or spotface a slot or diameter on the outside diameter of a workpiece. ARO's mill motor range covers the majority of primary and secondary machining applications. Industrial milling cutters are available in a wide variety of kinds, sizes and shapes for specific applications. Certain basic types are normally used with ARO milling motors.

1. End Mills. These are designed for milling slots, keyways and pockets where arbor-type cutters cannot be applied. The cutting edges, as the name implies, are at the end of the mill rather than on the circumference.
2. Shell End Mills. Similar in application to standard end mills, except that they are mounted to an arbor and used whenever the diameter of a standard end mill is too small for the application.
3. Woodruff Keyslot Cutters. Used for cutting keyslots in arbors or shafts for standard Woodruff keys. Available in arbor-type or shank-type.
4. Plain Metal-Slitting Saws. These cutters are designed with teeth around the entire circumference. Sides are concave to provide clearance in cutoff operations and for slotting heads of screws and shafts.
5. Side Milling Cutters. Used for milling plain and flat surfaces.

Proper motor selection should be governed by the fact that motor load speed, or the point at which peak horsepower is reached, occurs at approximately one-half the catalogued free speed. Feed rate shoud be controlled to load the motor to peak horsepower for maximum efficiency. The load-speed column on each catalog page shoud be used for motor selection. Feed rate and cutting speed will determine the amount of horsepower required for a specific application.

Three factors determine correct milling motor selection:

1. Horsepower-Formula given below.
2. RPM-Refer to chart for correct speed according to type of material.
3. Feed rate on face mills, or per-tooth rate on slotting, side mills or end mills.

FORMULA FOR MODEL SELECTION

$$HP = \frac{\text{Width of cut x depth of cut x feed rate per min.}}{\text{K factor}}$$

$$F, \text{feed rate} = \frac{\text{f, feed per tooth x t, number of teeth x n}}{\text{RPM of cutter. Alternately, see reference chart.}}$$

$$RPM = \frac{\text{4 x SFM or surface feet per minute}}{\text{D, diameter of cutter in inches}}$$

K FACTORS FOR COMMON MATERIALS

Material	K	Material	K	Material	K	Material	K
Magnesium	4.0	**CAST IRON**		To 400	0.5	220,000-260,000 p.s.i.	0.4
Aluminum	4.0			To 500	0.4	260,000-300,000 p.s.i.	0.3
Copper	2.0	Ferritic	1.5	**STAINLESS STEEL**		**HIGH TEMPERATURE ALLOYS**	
Brass	2.5	Pearlitic	1.0				
		Chilled	0.6	Free Machining	1.0		
Bronze	2.0	**STEEL**		Other	0.6	Nickel Base	0.4
				HIGH-TENSILE ALLOYS		Cobalt Base	0.4
Malleable Iron	1.0	To 150	1.0			Austenitic	0.4
		To 300	0.8	180,0000-220,000 p.s.i.	0.5		

REFERENCE CHART

Work Material	Hardness BHN	Speed R.P.M.	Feed Per Minute Face Mills	Feed Per Tooth: Slotting & Side Mills	Feed Per Tooth: End Mills	Work Material	Hardness BHN	Speed R.P.M.	Feed Per Minute Face Mills	Feed Per Tooth: Slotting & Side Mills	Feed Per Tooth: End Mills
Free Machining Steels, Plain Carbon, Alloy Steels, Series 400 & 500 Stainless	150-250 200 250 300 350	500-900 450-800 400-700 350-600 300-450	0.010-0.014 0.010-.0014 0.008-0.010 0.008-0.010 0.006-0.008	0.008-0.010 0.008-0.010 0.006-0.008 0.006-0.008 0.004-0.006	0.002-0.004 0.002-0.004 0.001-0.003 0.001-0.003 0.001-0.003	Magnesium Alloys Aluminum Alloys	– Low Silicon High Silicon	900-1,600 1,200-1,800 900-1,200	0.012-0.018 0.012-0.018 0.008-0.012	0.010-0.014 0.010-0.014 0.008-0.010	0.003-0.005 0.003-0.006 0.003-0.005
Series 200-300 Stainless Sheets	150-250	250-450	0.006-0.010	0.006-0.008	0.001-0.003	Titanium Pure	100-275	250-350	0.004-0.006	0.004-0.006	0.002-0.003
Hot Work Tool Steels	150-250 200-250	350-450 250-350	0.010-0.012 0.008-0.010	0.006-0.010 0.005-0.008	0.001-0.003 0.001-0.002	Copper Alloys	20-70 RB 60-100 RB	900-1,300 800-1,000	0.012-0.016 0.008-0.012	0.008-0.012 0.007-0.010	0.003-0.004
Cold Work Tool Steels	200-250	250-350	0.007-0.010	0.005-0.008	0.001-0.003	Brass & Bronze	To 200	600-900	0.010-0.012	0.008-0.010	0.003-0.004
High-Manganese Steel	170-220	100-200	0.007-0.010	0.005-0.008	0.002-0.003	Zinc Alloys	Cast	800-1,100	0.006-0.009	0.005-0.008	0.002-0.003
Gray Cast Iron	110-220 220-320	300-400 125-250	0.012-0.016 0.008-0.012	0.008-0.012 0.006-0.010	0.002-0.004 0.002-0.003	Manganese	140-220	150-200	0.005-0.008	0.004-0.006	0.002-0.004
Nodular Iron	140-250 250-400	325-450 225-300	0.012-0.016 0.008-0.012	0.008-0.012 0.006-0.010	0.002-0.004 0.002-0.003	Thermo-plastics	–	500-1,100	0.006-0.010	0.005-0.008	0.003-0.005
Malleable Iron	110-220 200-280	250-350 200-300	0.012-0.016 0.008-0.012	0.008-0.012 0.006-0.010	0.002-0.004 0.002-0.003	Thermo-plastics Plastics	–	500-1,100	0.006-0.010	0.005-0.008	0.003-0.005

000–SERIES FORWARD–ROTATION MILLING MOTORS (1/4″ CAPACITY)

SPECIFICATIONS



Model	Spindle	R.P.M.		Torque				Air Consumption at Free Speed		Sound Level at Free Speed	Weight		Gear Reduction
		Free Speed	Load Speed at Max. Hp	Stall		Output at Max. Hp							
				lb-ft	Nm	lb-ft	Nm	SCFM	L/s	dB(A)	lbs	kg	
NON-REVERSIBLE - 0.25 HP													
7533-2-B	1/4″ Maximum Collet Capacity	550	325	8.2	10.6	4.0	5.1	18.1	8.5	75	2.07	0.93	Double
7534-2-B		900	550	5.0	6.4	2.4	3.2	18.1	8.5	75	2.07	0.93	Double
7535-2-B		2,700	1,600	1.75	2.2	0.82	1.1	18.1	8.5	75	1.77	0.80	Single
7536-2-B		4,500	2,700	1.05	1.3	0.49	0.60	18.1	8.5	75	1.77	0.80	Single
7537-2-B		20,000	12,000	0.22	0.30	0.11	0.10	18.1	8.5	75	1.77	0.80	Single

Collet Insert No.	Size	Minimum Capacity		Maximum Capacity	
		in	mm	in	mm
31812-1	3/64″	1/64″	0.40	3/64″	1.19
31812-2	5/64″	3/64″	1.19	5/64″	1.98
31812-3	3/32″	1/16″	1.59	3/32″	2.38
31812-4	1/8″	3/32″	2.38	1/8″	3.18
31812-5	5/32″	1/8″	3.18	5/32″	3.97
31812-6	3/16″	5/32″	3.97	3/16″	4.76
31812-7	7/32″	3/16″	4.76	7/32″	5.56
31812-8	1/4″	7/32″	5.56	1/4″	6.35

APPROX. TOOLING PENETRATION - 1 1/8″ (28.6 MM)

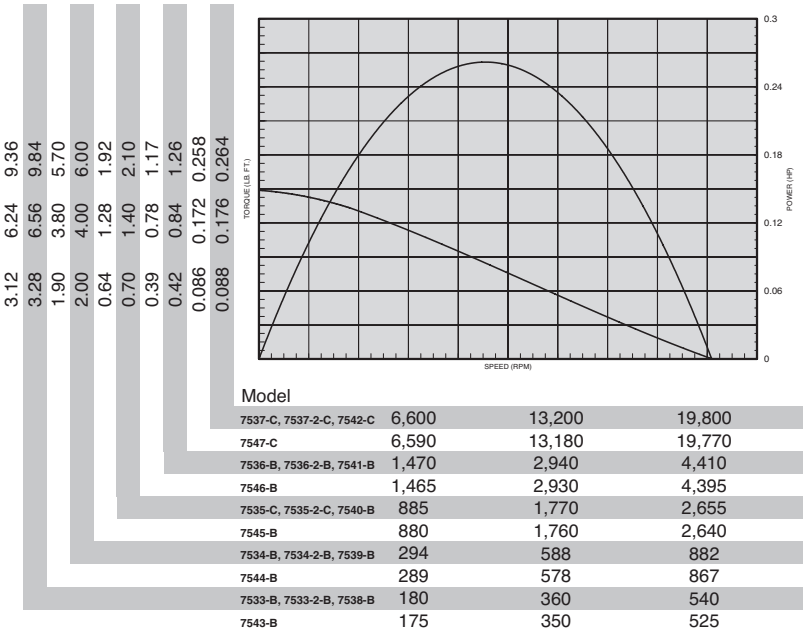

Model			
7537-C, 7537-2-C, 7542-C	6,600	13,200	19,800
7547-C	6,590	13,180	19,770
7536-B, 7536-2-B, 7541-B	1,470	2,940	4,410
7546-B	1,465	2,930	4,395
7535-C, 7535-2-C, 7540-B	885	1,770	2,655
7545-B	880	1,760	2,640
7534-B, 7534-2-B, 7539-B	294	588	882
7544-B	289	578	867
7533-B, 7533-2-B, 7538-B	180	360	540
7543-B	175	350	525

STANDARD EQUIPMENT

Steel motor housing, flush-type grease fittings at rotation points for gear and bearing lubrication, exhaust manifold rotatable within 360°, muffler, integral collet spindle with 31812-8 1/4″ capacity collet for end mills and Woodruff key slot cutters, duplex bearing on drive spindle for maximum radial support.

000–SERIES MILLING MOTORS AND MOUNTING ACCESSORIES

DIMENSIONS

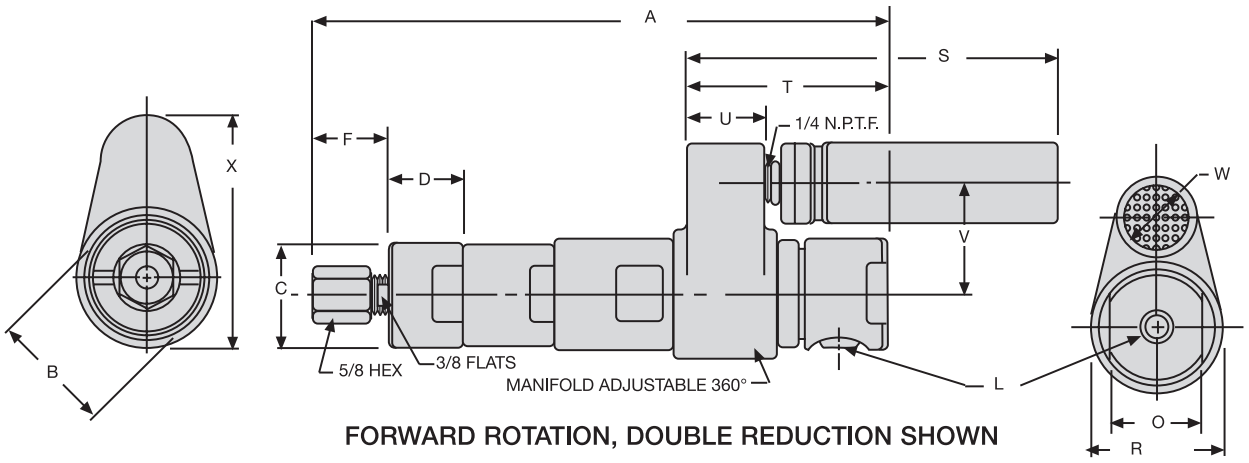

FORWARD ROTATION, DOUBLE REDUCTION SHOWN

Models	Gear Reduction	Dimension A
7535-2-C 7536-2-B 7537-2-C	Single	$5^{15}/_{16}$ 151 mm
7533-2-B 7534-2-B	Double	7 178 mm

Scale	B	C	D	F	L	O	R
in	$1^{3}/_{8}$	1.311 1.312	0.870 0.890	5/16 (Approx.)	1/8 NPTF Air Inlet	$1^{1}/_{8}$	$1^{5}/_{8}$
mm	35	33.30 33.32	22.10 22.61	24 (Approx.)		28	41

Scale	S	T	U	V	W	X
in	$4^{9}/_{16}$	$2^{15}/_{32}$	31/32	$1^{3}/_{8}$	1	$2^{11}/_{16}$
mm	116	63	25	35	25	68

0–SERIES FORWARD–ROTATION MILLING MOTORS
SPECIFICATIONS



Model	Spindle	R.P.M.		Torque				Air Consumption at Free Speed		Sound Level at Free Speed	Weight		Gear Reduction
		Free Speed	Load Speed at Max. Hp	Stall		Output at Max. Hp							
				lb-ft	Nm	lb-ft	Nm	SCFM	L/s	dB(A)	lbs	kg	
NON-REVERSIBLE - 0.60 HP													
8232-1	1/4″ Maximum Collet Capacity	19,000	9,800	0.70	0.9	0.32	0.4	41.0	19.4	80	2.87	1.29	Single
8232-2		5,700	2,900	2.15	2.9	1.10	1.5	41.0	19.4	80	2.87	1.29	Single
8232-3		3,500	1,750	3.50	4.7	1.80	2.4	41.0	19.4	80	2.87	1.29	Single
8232-4		2,800	1,400	4.50	6.1	2.20	3.0	41.0	19.4	80	2.87	1.29	Single
8232-5		1,650	840	7.50	10.2	3.80	5.1	41.0	19.4	80	3.62	1.63	Double
8232-6		1,000	500	12.00	16.3	6.20	8.4	41.0	19.4	80	3.62	1.63	Double
8232-7		800	390	14.80	20.0	8.00	10.8	41.0	19.4	80	3.62	1.63	Double

Collet Insert No.	Size	Minimum Capacity		Maximum Capacity	
		in	mm	in	mm
31812-1	3/64″	1/64″	0.40	3/64″	1.19
31812-2	5/64″	3/64″	1.19	5/64″	1.98
31812-3	3/32″	1/16″	1.59	3/32″	2.38
31812-4	1/8″	3/32″	2.38	1/8″	3.18
31812-5	5/32″	1/8″	3.18	3/64″	3.97
31812-6	3/16″	5/32″	3.97	3/16″	4.76
31812-7	7/32″	3/16″	4.76	7/32″	5.56
31812-8	1/4″	7/32″	5.56	1/4″	6.35

APPROX. TOOLING PENETRATION - 1 1/4″ (31.8 MM)

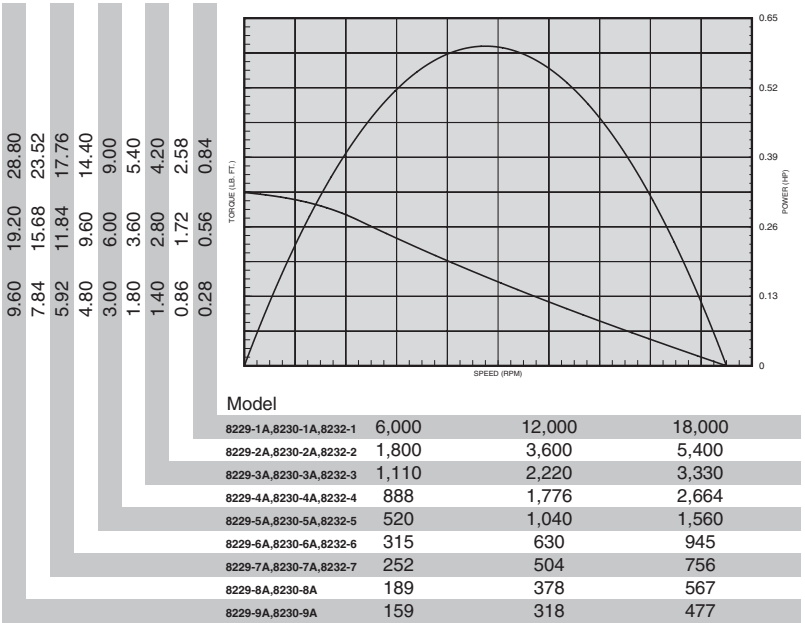

Model			
8229-1A,8230-1A,8232-1	6,000	12,000	18,000
8229-2A,8230-2A,8232-2	1,800	3,600	5,400
8229-3A,8230-3A,8232-3	1,110	2,220	3,330
8229-4A,8230-4A,8232-4	888	1,776	2,664
8229-5A,8230-5A,8232-5	520	1,040	1,560
8229-6A,8230-6A,8232-6	315	630	945
8229-7A,8230-7A,8232-7	252	504	756
8229-8A,8230-8A	189	378	567
8229-9A,8230-9A	159	318	477

STANDARD EQUIPMENT

Steel motor housing, flush-type grease fittings at rotation points for gear and bearing lubrication, exhaust manifold rotatable within 360°, muffler, integral collet spindle with 31812-8 1/4″ capacity collet for end mills and Woodruff key slot cutters, duplex bearing on drive spindle for maximum radial support.

0–SERIES MILLING MOTORS AND MOUNTING ACCESSORIES
DIMENSIONS

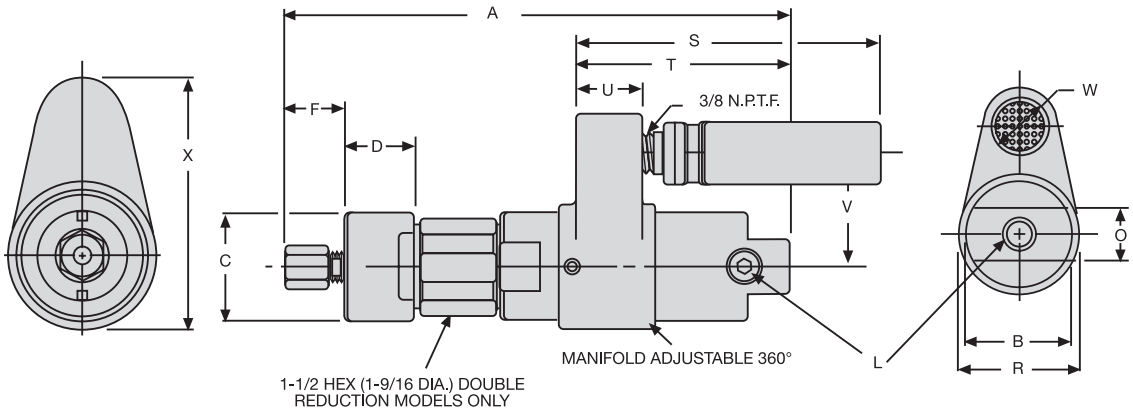

FORWARD ROTATION, DOUBLE REDUCTION SHOWN

Models	Gear Reduction	Dimension A
8232-( )	Single	$6^{7}/_{8}$ 175 mm
	Double	$8^{3}/_{16}$ 208 mm

Scale	B	C	D	F	L	O	R
in	$1^{3}/_{4}$	1.740 1.739	$1^{5}/_{32}$	15/16 (Approx.)	1/4 NPTF Air Inlet	7/8	2
mm	44	44.20 44.17	29	24 (Approx.)		22	51

Scale	S	T	U	V	W	X
in	$4^{7}/_{8}$	$3^{13}/_{32}$	$1^{1}/_{16}$	$1^{13}/_{16}$	1	$3^{7}/_{16}$
mm	124	86	27	46	25	87

2200–SERIES FORWARD–ROTATION MILLING MOTORS

SPECIFICATIONS



Model	Spindle	R.P.M.		Torque				Air Consumption at Free Speed		Sound Level at Free Speed	Weight		Gear Reduction
		Free Speed	Load Speed at Max. Hp	Stall		Output at Max. Hp							
				lb-ft	Nm	lb-ft	Nm	SCFM	L/s	dB(A)	lbs	kg	
NON-REVERSIBLE - 0.85 HP													
7800-2B	3/8″ Maximum Collet Capacity	18,000	9,000	1.00	1.4	0.50	0.68	41.7	19.7	78	4.89	2.20	Single
7801-2B		4,600	2,400	4.00	5.5	1.86	2.5	41.7	19.7	78	4.89	2.20	Single
7802-2B		2,500	1,300	7.50	10.3	3.43	4.7	41.7	19.7	78	4.89	2.20	Single
7803-2B		1,200	600	16.00	21.9	7.44	10.2	41.7	19.7	78	6.39	2.86	Double
7804-2B		650	320	30.00	41.2	13.95	19.1	41.7	19.7	78	6.39	2.86	Double

COLLET SLEEVES

Collet Insert No.	Size	Minimum Capacity		Maximum Capacity	
		in	mm	in	mm
32968-1	1/8″	3/32″	2.38	1/8″	3.18
32968-2	5/32″	1/8″	3.18	5/32″	3.97
32968-3	3/16″	5/32″	3.97	3/16″	4.76
32968-4	7/32″	3/16″	4.76	7/32″	5.56
32968-5	1/4″	7/32″	5.56	1/4″	6.35
32968-6	9/32″	1/4″	6.35	9/32″	7.14
32968-7	5/16″	9/32″	7.14	5/16″	7.94
32968-8	11/32″	5/16″	7.94	11/32″	8.73
32968-9	3/8″	11/32″	8.73	3/8″	9.53

APPROX. TOOLING PENETRATION - 2″ (51 MM)

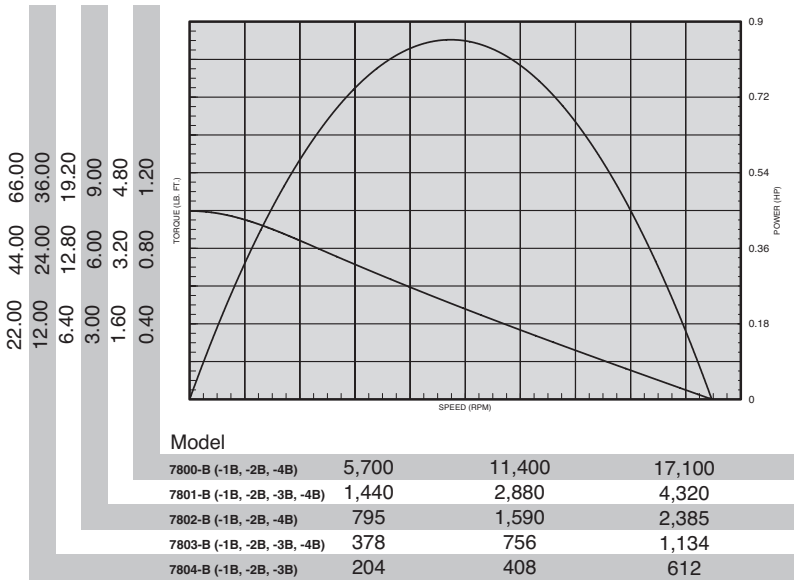

Model			
7800-B (-1B, -2B, -4B)	5,700	11,400	17,100
7801-B (-1B, -2B, -3B, -4B)	1,440	2,880	4,320
7802-B (-1B, -2B, -4B)	795	1,590	2,385
7803-B (-1B, -2B, -3B, -4B)	378	756	1,134
7804-B (-1B, -2B, -3B)	204	408	612

STANDARD EQUIPMENT

Steel motor housing, flush-type grease fittings at rotation points for gear and bearing lubrication, exhaust manifold rotatable within 360°, muffler, integral collet spindle with 32968-9 3/8″ capacity collet for end mills and Woodruff key slot cutters, duplex bearing support on drive spindle for maximum radial support.

2200–SERIES MILLING MOTORS AND MOUNTING ACCESSORIES

DIMENSIONS

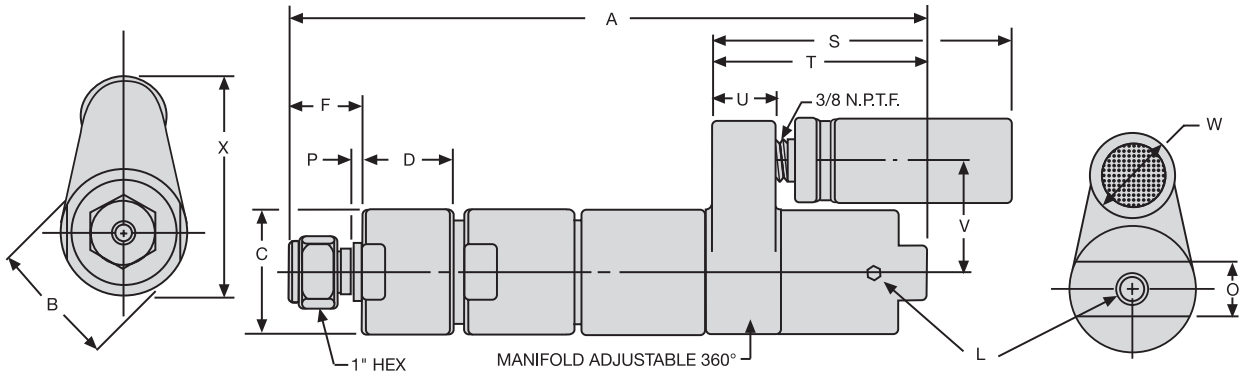

FORWARD ROTATION, DOUBLE REDUCTION SHOWN

Models	Gear Reduction	Dimension A
7800-2B 7801-2B 7802-2B	Single	$8^{11}/_{32}$ 212 mm
7803-2B 7804-2B 7805-2B	Double	$10^{1}/_{16}$ 255 mm

Scale	B	C	D	F	L	O	P
in	2	2.001 2.000	1.422 1.452	$1^{5}/_{32}$ (Approx.)	1/4 NPTF Air Inlet	7/8	0.097 0.157
mm	51	50.80 50.83	36.12 36.88	29 (Approx.)		22	2.46 3.99

Scale	S	T	U	V	W	X
in	$4^{7}/_{8}$	$3^{1}/_{2}$	$1^{1}/_{16}$	$1^{13}/_{16}$	$1^{3}/_{8}$	$3^{1}/_{2}$
mm	124	89	27	46	35	89

2200–SERIES FORWARD–ROTATION STRADDLE MOUNT MILLING MOTORS

SPECIFICATIONS



Model	Spindle	R.P.M.		Torque				Air Consumption at Free Speed		Sound Level at Free Speed	Weight		Gear Reduction
		Free Speed	Load Speed at Max. Hp	Stall		Output at Max. Hp							
				lb-ft	Nm	lb-ft	Nm	SCFM	L/s	dB(A)	lbs	kg	
NON-REVERSIBLE - 0.85 HP													
7801-3B	7/16″-20 UNF-3A Threaded, Plus 1/8″ Sq. Key Drive	4,600	2,400	4.00	5.5	1.86	2.5	41.7	19.7	78	4.89	2.20	Single
7803-3B		1,200	600	16.00	21.9	7.44	10.2	41.7	19.7	78	6.39	2.86	Double
7804-3B		650	330	30.00	41.2	13.95	19.1	41.7	19.7	78	6.39	2.86	Double
7805-3B		350	170	55.00	75.5	26.25	36.0	41.7	19.7	78	6.39	2.86	Double

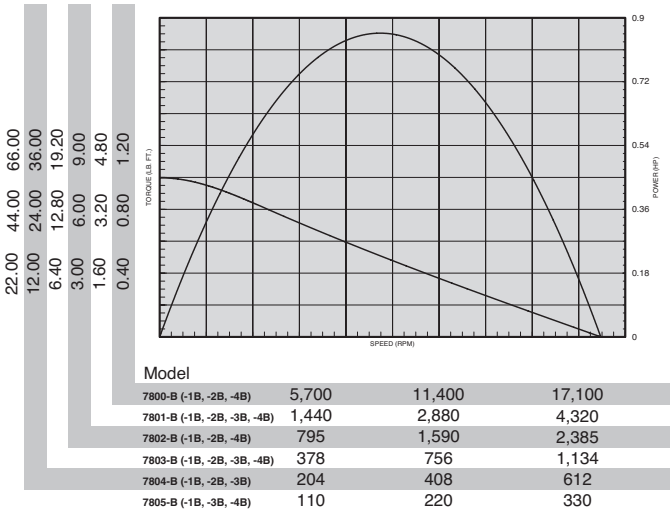

Model			
7800-B (-1B, -2B, -4B)	5,700	11,400	17,100
7801-B (-1B, -2B, -3B, -4B)	1,440	2,880	4,320
7802-B (-1B, -2B, -4B)	795	1,590	2,385
7803-B (-1B, -2B, -3B, -4B)	378	756	1,134
7804-B (-1B, -2B, -3B)	204	408	612
7805-B (-1B, -3B, -4B)	110	220	330

STANDARD EQUIPMENT

Keyed and threaded spindle for shell end mills, metal-slitting saws and side-mill cutters, duplex bearing on drive spindle to provide maximum radial support. Also steel motor housing, flush-type grease fittings, exhaust manifold and muffler.

Note: Key not furnished.

2200-SERIES AND MOUNTING ACCESSORY DIMENSIONS

Models	Gear Reduction	Dimension A
7800-3B 7801-3B 7802-3B	Single	$9^{1}/_{2}$ 241 mm
7803-3B 7804-3B 7805-3B	Double	$11^{9}/_{32}$ 286 mm

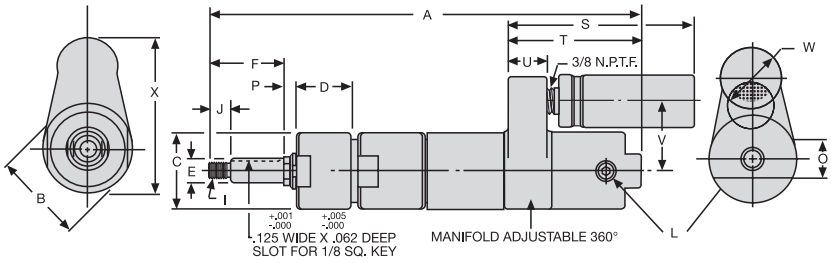

FORWARD ROTATION, DOUBLE REDUCTION SHOWN

Scale	B	C	D	E	F	I	J	L
in	2	2.000 2.001	1.422 1.452	0.6240 0.6245	1.932 1.942	7/16-20 UNF-3A Thread	0.552 0.557	1/4 NPTF Air Inlet
mm	51	50.80 50.83	36.12 36.88	15.85 15.86	49.07 49.33		14.02 14.53	

Scale	O	P	S	T	U	V	W	X
in	7/8	0.270 0.380	$4^{7}/_{8}$	$3^{1}/_{2}$	$1^{1}/_{16}$	$1^{13}/_{16}$	$1^{3}/_{8}$	$3^{1}/_{2}$
mm	22	6.86 9.65	124	89	27	46	35	89

2200–SERIES FORWARD–ROTATION SIDE MOUNT MILLING MOTORS
SPECIFICATIONS

Model	Spindle	R.P.M.		Torque				Air Consumption at Free Speed		Sound Level at Free Speed	Weight		Gear Reduction
		Free Speed	Load Speed at Max. Hp	Stall		Output at Max. Hp							
				lb-ft	Nm	lb-ft	Nm	SCFM	L/s	dB(A)	lbs	kg	
NON-REVERSIBLE - 0.85 HP													
7800-4B	3/8″ Maximum Collet Capacity	18,000	9,000	1.00	1.4	0.50	0.68	41.7	19.7	78	4.89	2.20	Single
7801-4B		4,600	2,400	4.00	5.5	1.86	2.5	41.7	19.7	78	4.89	2.20	Single
7802-4B		2,500	1,300	7.50	10.3	3.43	4.7	41.7	19.7	78	4.89	2.20	Single
7803-4B		1,200	600	16.00	21.9	7.44	10.2	41.7	19.7	78	6.39	2.86	Double
7805-4B		350	170	55.00	75.5	26.25	36.0	41.7	19.7	78	6.39	2.86	Double

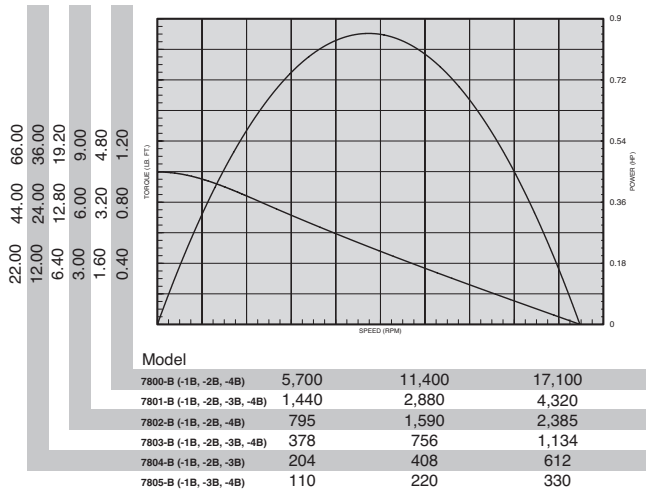

Model			
7800-B (-1B, -2B, -4B)	5,700	11,400	17,100
7801-B (-1B, -2B, -3B, -4B)	1,440	2,880	4,320
7802-B (-1B, -2B, -4B)	795	1,590	2,385
7803-B (-1B, -2B, -3B, -4B)	378	756	1,134
7804-B (-1B, -2B, -3B)	204	408	612
7805-B (-1B, -3B, -4B)	110	220	330

STANDARD EQUIPMENT

Integral collet spindle and mounting head with 4 tapped holes for close-quarter mounting. Other standard equipment same as for motors on page 68.

EQUIPMENT OPTIONS

For filter-regulator-lubricator, see listing on page 92.

2200-SERIES AND MOUNTING ACCESSORY DIMENSIONS

Models	Gear Reduction	Dimension A	
7800-4B 7801-4B 7802-4B	Single	8 3/8	213 mm
7803-4B 7804-4B 7805-4B	Double	10 3/16	259 mm

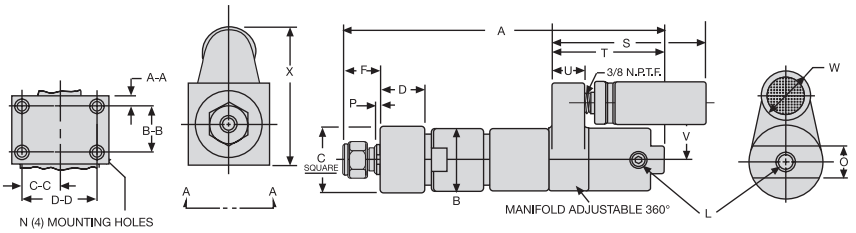

FORWARD ROTATION, DOUBLE REDUCTION SHOWN

Scale	B	C	D	F	L	N	O	P	S
in	2	2115 2.135	1.422 1.452	1 5/32 (Approx.)	1/4 NPTF Air Inlet	1/4-28 UNF-2B Thread 3/8″ Deep	7/8	0.097 0.157	4 7/8
mm	51	53.72 54.23	36.12 36.88	29 (Approx.)			22	2.46 3.99	124

Scale	T	U	V	W	X	A-A	B-B	C-C	D-D
in	3 1/2	1 1/16	1 13/16	1 3/8	3 9/16	0.213 0.223	1.000 1.005	0.807 0.817	1.62 1.63
mm	89	27	46	35	90	5.41 5.66	25.40 25.53	20.50 20.75	41.15 41.40

44–SERIES FORWARD–ROTATION MILLING MOTORS
SPECIFICATIONS



Model	Spindle	R.P.M.		Torque				Air Consumption at Free Speed		Sound Level at Free Speed	Weight		Gear Reduction
		Free Speed	Load Speed at Max. Hp	Stall		Output at Max. Hp							
				lb-ft	Nm	lb-ft	Nm	SCFM	L/s	dB(A)	lbs	kg	
NON-REVERSIBLE - 2.0 HP													
8200-4A	3/4″ Maximum Collet Capacity	275	140	124.00	168.0	75.00	101.6	95.0	44.8	80	18.24	8.20	Double
8201-4A		500	255	70.50	95.5	41.00	55.5	95.0	44.8	80	18.24	8.20	Double
8202-4A		900	445	40.50	54.9	24.00	32.5	95.0	44.8	80	18.24	8.20	Double
8203-4A		2,000	1,050	18.00	24.4	10.00	13.5	95.0	44.8	80	13.82	5.21	Single
8204-4A		3,500	1,740	10.20	13.8	6.00	8.1	95.0	44.8	80	13.82	5.21	Single
8205-4A		14,000	7,000	2.85	3.9	1.50	2.0	95.0	44.8	80	13.82	5.21	Single

Collet Insert No.	Dash No.	Size	Minimum Capacity		Maximum Capacity		Collet Insert No.	Dash No.	Size	Minimum Capacity		Maximum Capacity	
			in	mm	in	mm				in	mm	in	mm
35264-1	-A	1/4″	0.2187	5.56	0.2500	6.35	35264-10	-K	17/32″	0.5000	12.70	0.5312	13.49
35264-2	-B	9/32″	0.2500	6.35	0.2812	7.14	35264-11	-L	9/16″	0.5312	13.49	0.5625	14.29
35264-3	-C	5/16″	0.2812	7.14	0.3125	7.94	35264-12	-M	19/32″	0.5625	14.29	0.5937	15.08
35264-4	-D	11/32″	0.3125	7.94	0.3437	8.73	35264-13	-N	5/8″	0.5937	15.08	0.6250	15.88
35264-5	-E	3/8″	0.3437	8.73	0.3750	9.53	35264-14	-P	21/32″	0.6250	15.88	0.6562	16.67
35264-6	-F	13/32″	0.3750	9.53	0.4062	10.32	35264-15	-Q	11/16″	0.6562	16.67	0.6875	17.46
35264-7	-G	7/16″	0.4062	10.32	0.4375	11.11	35264-16	-R	23/32″	0.6875	17.46	0.7187	18.26
35264-8	-H	15/32″	0.4375	11.11	0.4687	11.91	35264-17	-S	3/4″	0.7187	18.26	0.7500	19.05
35264-9	-J	1/2″	0.4687	11.91	0.5000	12.70							

APPROX. TOOLING PENETRATION - $2^{7}/_{16}$″ (62 MM)

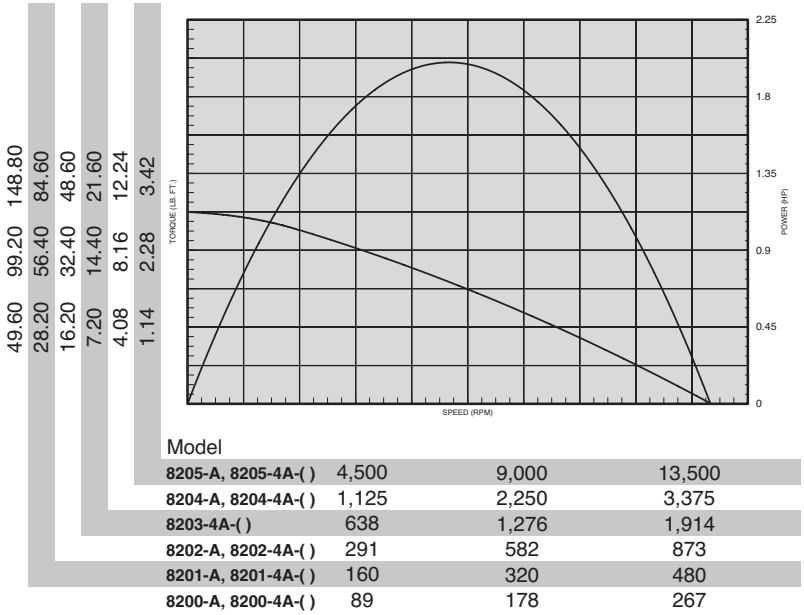

Model			
8205-A, 8205-4A-( )	4,500	9,000	13,500
8204-A, 8204-4A-( )	1,125	2,250	3,375
8203-4A-( )	638	1,276	1,914
8202-A, 8202-4A-( )	291	582	873
8201-A, 8201-4A-( )	160	320	480
8200-A, 8200-4A-( )	89	178	267

STANDARD EQUIPMENT

Steel motor housing, flush-type grease fittings at rotation points for gear and bearing lubrication, exhaust manifold rotatable within 360°, muffler, integral collet spindle with 35264-17 3/4″ capacity for end mills and Woodruff key slot cutters, duplex bearing on drivespindle for maximum radial support.

Ingersoll Rand

44–SERIES MILLING MOTORS AND MOUNTING ACCESSORIES

DIMENSIONS

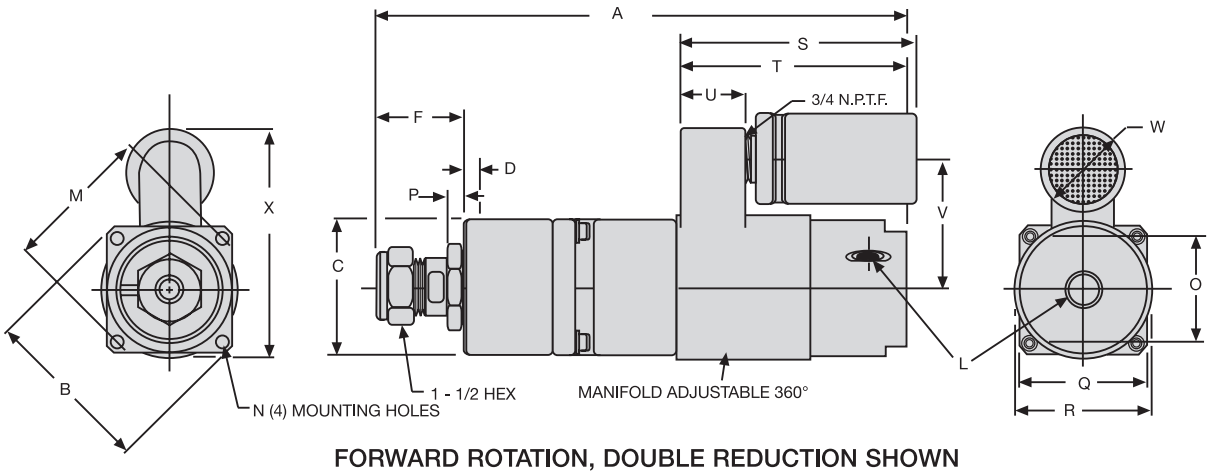

FORWARD ROTATION, DOUBLE REDUCTION SHOWN

Models	Gear Reduction	Dimension A
8203-4A 8204-4A 8205-4A	Single	$11^{11}/_{16}$ 297 mm
8200-4A 8201-4A 8202-4A	Double	$14^{1}/_{2}$ 368 mm

Scale	B	C	D	F	L	M	N	O	P
in	4.090 4.110	2.996 2.998	0.302 0.322	$1^{15}/_{16}$ (Approx.)	3/8 NPTF Air Inlet	3.498 3.502	5/16-24 UNF-2B Thread	$2^{1}/_{2}$	0.335 0.364
mm	103.89 104.39	76.10 76.15	7.67 8.18	49 (Approx.)		86.56 88.95		63	8.51 9.25

Scale	Q	R	S	T	U	V	W	X
in	3	$3^{3}/_{16}$	$5^{3}/_{16}$	5	$1^{7}/_{16}$	$2^{27}/_{32}$	2	$5^{7}/_{16}$
mm	76	81	132	127	36	72	51	138

SPECIALLY GOVERNED MOTORS

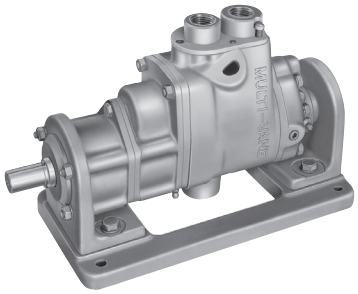

MODEL 22N51–W/RC MULTI–VANE AIR MOTORS

SPECIFICATIONS

Model	Max. Power		Speed at Max. Power	Free Speed	Starting Torque		Stall Torque		Air Consumption at Max. Power		Weight	
	hp	kw	rpm	rpm	lb-ft	Nm	lb-ft	Nm	scfm	m^3/m	lb	kg
REVERSIBLE												
22N51-W/RC	1.75	1.31	208	280	49	66.4	66	89.5	55	1.6	21	9.5

Performance figures are at 90 psig (620 kPa) air pressure.

SPECIFICATIONS

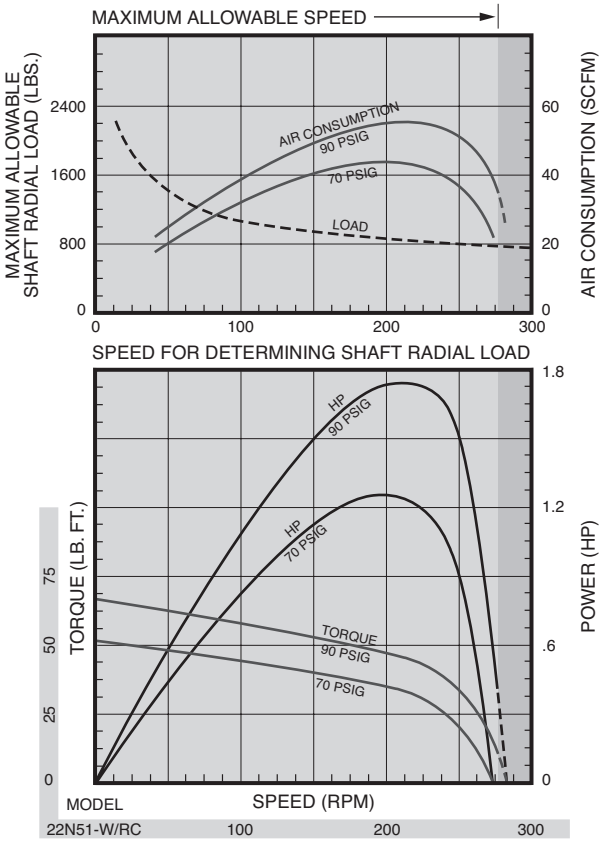

DIMENSIONS

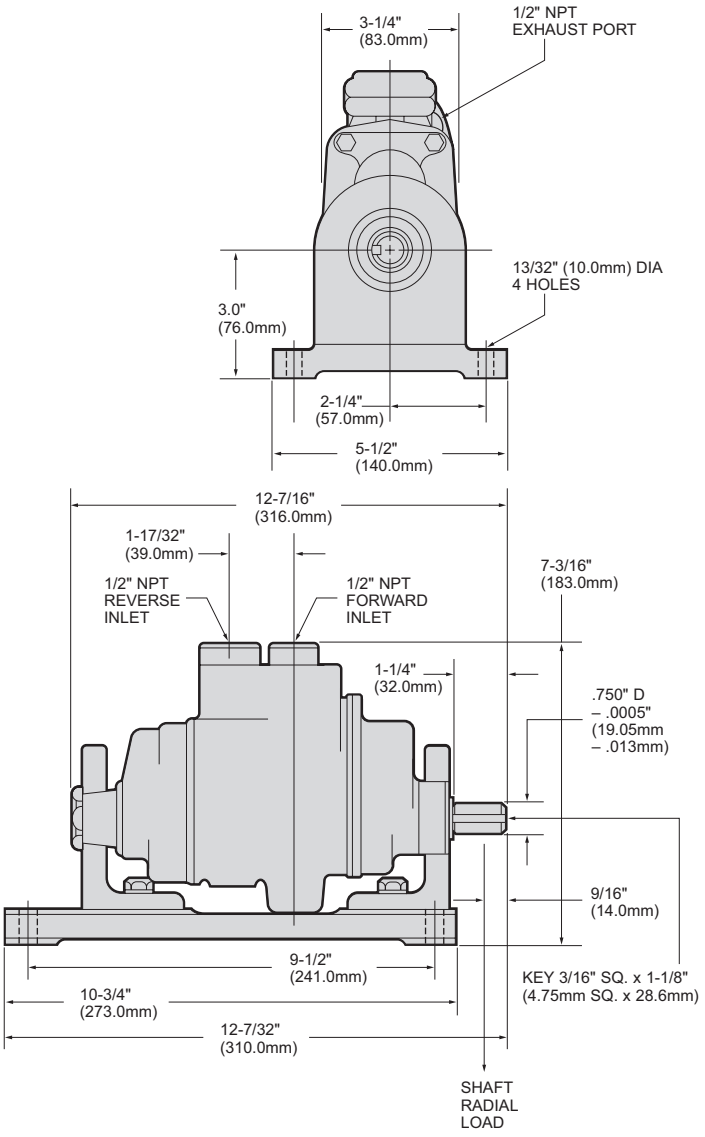

SERIES 551 MULTI–VANE AIR MOTORS
SPECIFICATIONS

Model	Max. Power		Speed at Max. Power	Free Speed ▲	Starting Torque		Stall Torque		Air Consumption at Max. Power		Weight	
	hp	kw	rpm	rpm	lb-ft	Nm	lb-ft	Nm	scfm	m^3/m	lb	kg
REVERSIBLE												
551SM51-W/RC	5.6	4.18	95	120	400	542	545	739	160	4.53	93	42.2
551SO51-W/RC	5.6	4.18	59	77	650	881	885	1,200	160	4.53	93	42.2

▲ ALL models must be operated with sufficient load to prevent speed from exceeding maximum allowable speed shown on performance curve. Performance figures are at 90 psig (620 kPa) air pressure.

SPECIFICATIONS

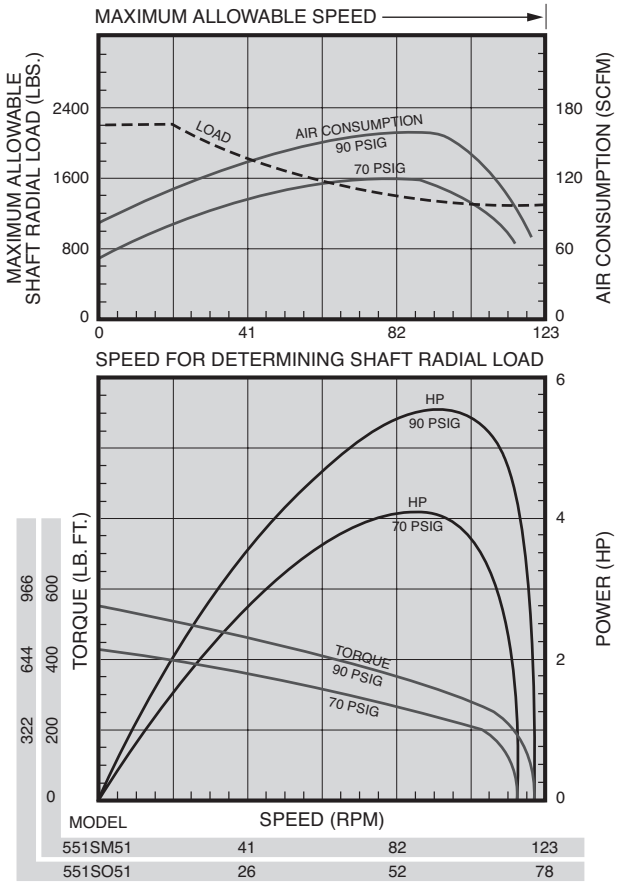

DIMENSIONS

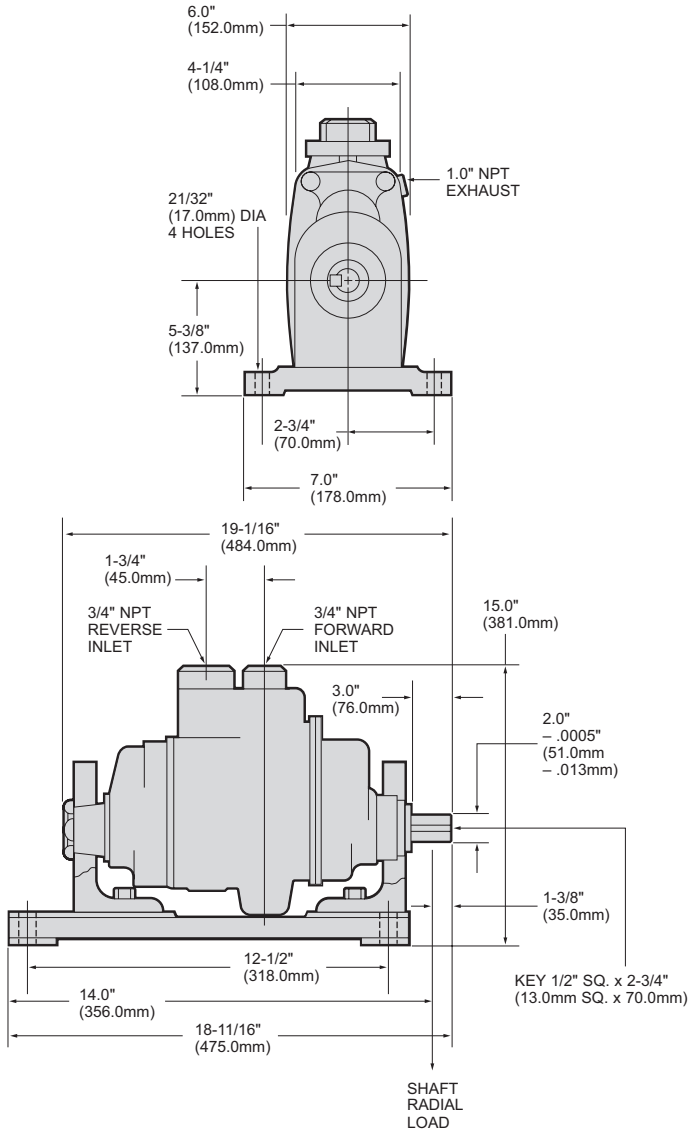

DIRECT AND GEARED DRIVE PISTON AIR MOTORS

SPECIFICATIONS

Model	Max. Power		Speed at Max. Power	Free Speed ▲	Starting Torque		Stall Torque		Air Consumption at Max. Power		Weight	
	hp	kw	rpm	rpm	lb-ft	Nm	lb-ft	Nm	scfm	m^3/m	lb	kg
DIRECT DRIVE REVERSIBLE												
DD6M	2.6	1.94	750	1,490	24	32.5	34.2	46.4	79	2.2	135	61.2
EEM	4.4	3.28	735	1,450	41	55.6	59	80	137	3.9	200	90.7
EE5M	7.8	5.82	950	1,875	60	81.4	80.5	109.2	220	6.2	210	95.3
HHM	11.3	8.43	730	1,450	106	144	152	206	270	7.6	235	107
HH5M	15.2	11.33	750	1,500	146	198	195	264	400	11.3	250	113
KK6M	25	18.64	755	1,500	260	353	325	441	680	19.3	475	216
GEARED DRIVE REVERSIBLE												
EE3G	5	3.73	275	560	122	165	175	237	155	4.4	200	90.7
EE53G	6.8	5.07	305	600	154	209	205	278	220	6.2	220	99.8
EE9G	4.7	3.51	92	190	357	484	510	692	155	4.4	210	95.3
EE59G	6.5	4.85	100	200	450	610	600	814	220	6.2	230	104

▲ ALL models must be operated with sufficient load to prevent speed from exceeding maximum allowable speed shown on performance curve.
All of the above motors are furnished less valve and piping as standard.
Performance figures are at 90 psig (620 kPa) air pressure.

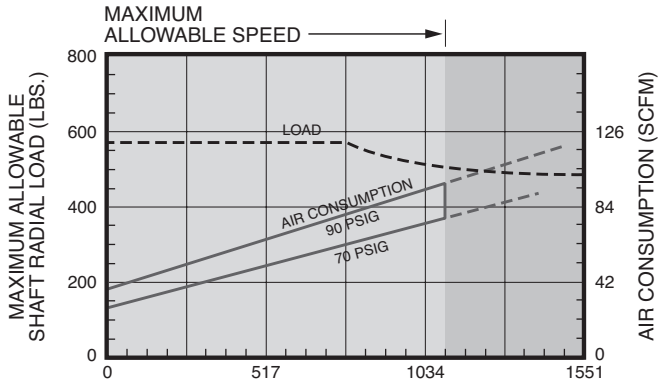

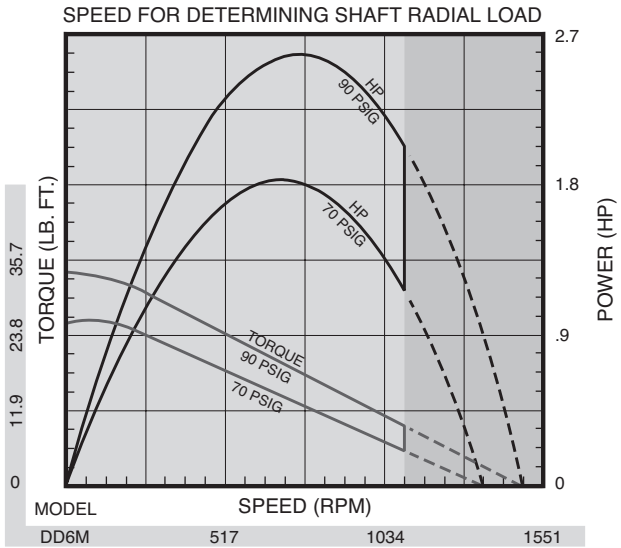

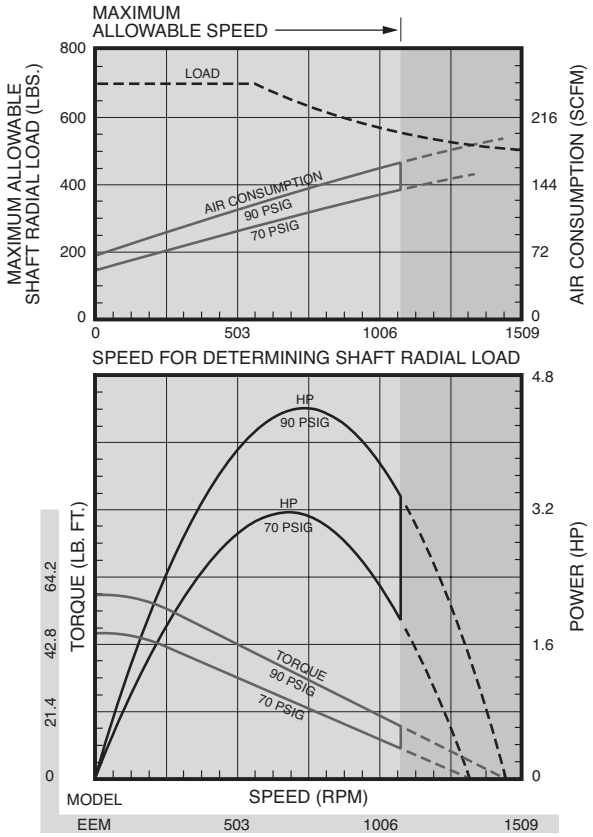
MAXIMUM
ALLOWABLE SPEED
MAXIMUM ALLOWABLE
SHAFT RADIAL LOAD (LBS.)
800
600
400
200
0
LOAD
AIR CONSUMPTION
90 PSIG
70 PSIG
216
144
72
0
AIR CONSUMPTION (SCFM)
0
503
1006
1509
SPEED FOR DETERMINING SHAFT RADIAL LOAD
HP
90 PSIG
HP
70 PSIG
4.8
3.2
1.6
0
POWER (HP)
TORQUE (LB. FT.)
64.2
42.8
21.4
0
TORQUE
90 PSIG
70 PSIG
MODEL
SPEED (RPM)
EEM
503
1006
1509

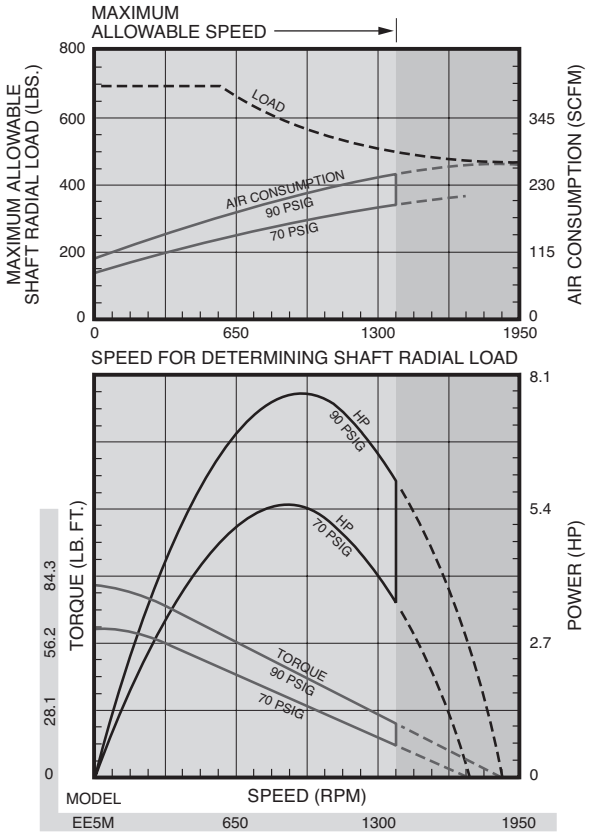
MAXIMUM
ALLOWABLE SPEED
MAXIMUM ALLOWABLE
SHAFT RADIAL LOAD (LBS.)
800
600
400
200
0
LOAD
AIR CONSUMPTION
90 PSIG
70 PSIG
345
230
115
0
AIR CONSUMPTION (SCFM)
0
650
1300
1950
SPEED FOR DETERMINING SHAFT RADIAL LOAD
HP
90 PSIG
HP
70 PSIG
8.1
5.4
2.7
0
POWER (HP)
TORQUE (LB. FT.)
84.3
56.2
28.1
0
TORQUE
90 PSIG
70 PSIG
MODEL
SPEED (RPM)
EE5M
650
1300
1950

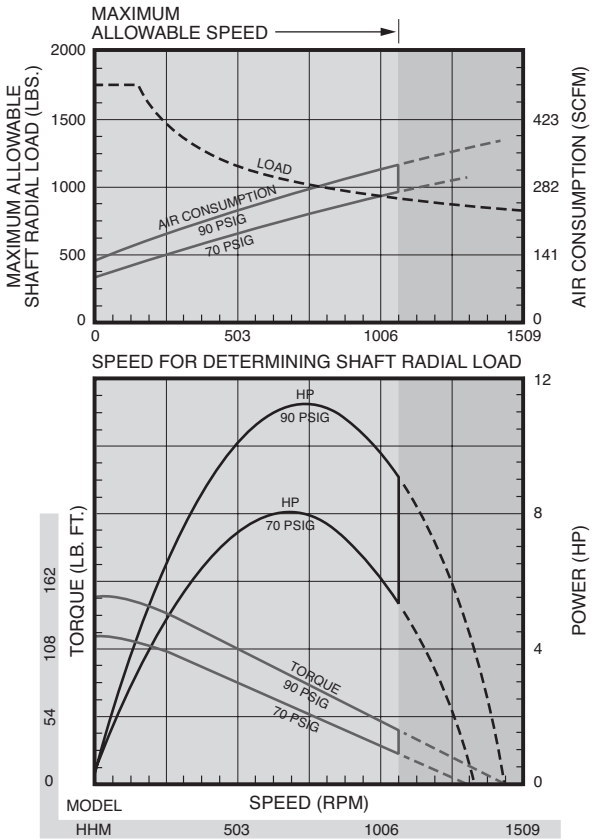
MAXIMUM
ALLOWABLE SPEED
MAXIMUM ALLOWABLE
SHAFT RADIAL LOAD (LBS.)
2000
1500
1000
500
0
LOAD
AIR CONSUMPTION
90 PSIG
70 PSIG
423
282
141
0
AIR CONSUMPTION (SCFM)
0
503
1006
1509
SPEED FOR DETERMINING SHAFT RADIAL LOAD
HP
90 PSIG
HP
70 PSIG
12
8
4
0
POWER (HP)
TORQUE (LB. FT.)
162
108
54
0
TORQUE
90 PSIG
70 PSIG
MODEL
SPEED (RPM)
HHM
503
1006
1509

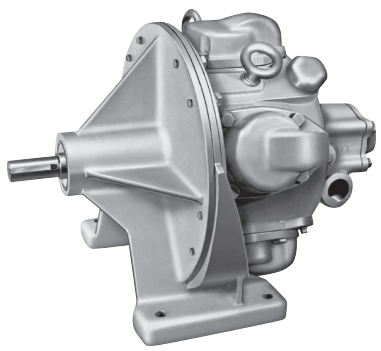

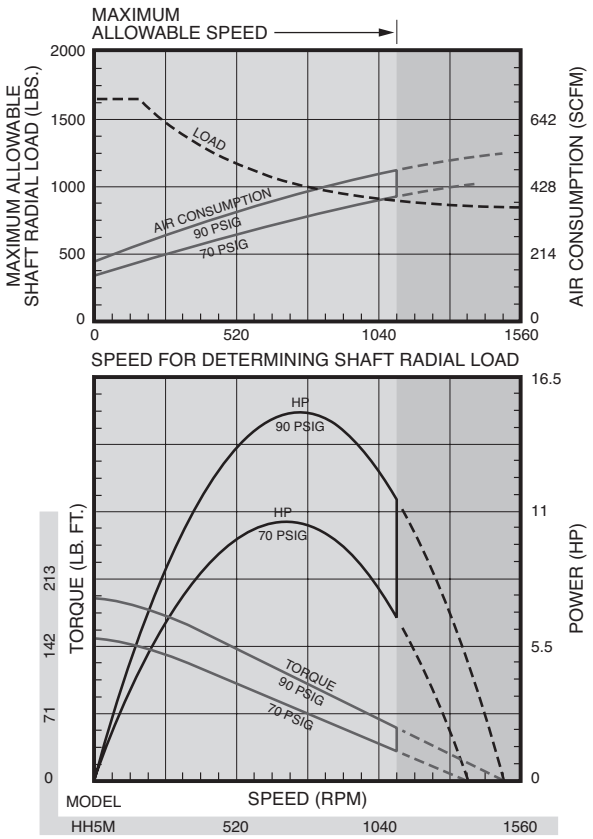
MAXIMUM
ALLOWABLE SPEED
MAXIMUM ALLOWABLE
SHAFT RADIAL LOAD (LBS.)
2000
1500
1000
500
0
LOAD
AIR CONSUMPTION
90 PSIG
70 PSIG
642
428
214
0
AIR CONSUMPTION (SCFM)
0
520
1040
1560
SPEED FOR DETERMINING SHAFT RADIAL LOAD
16.5
11
5.5
0
HP
90 PSIG
HP
70 PSIG
TORQUE
90 PSIG
70 PSIG
213
142
71
0
TORQUE (LB. FT.)
POWER (HP)
MODEL
SPEED (RPM)
HH5M
520
1040
1560

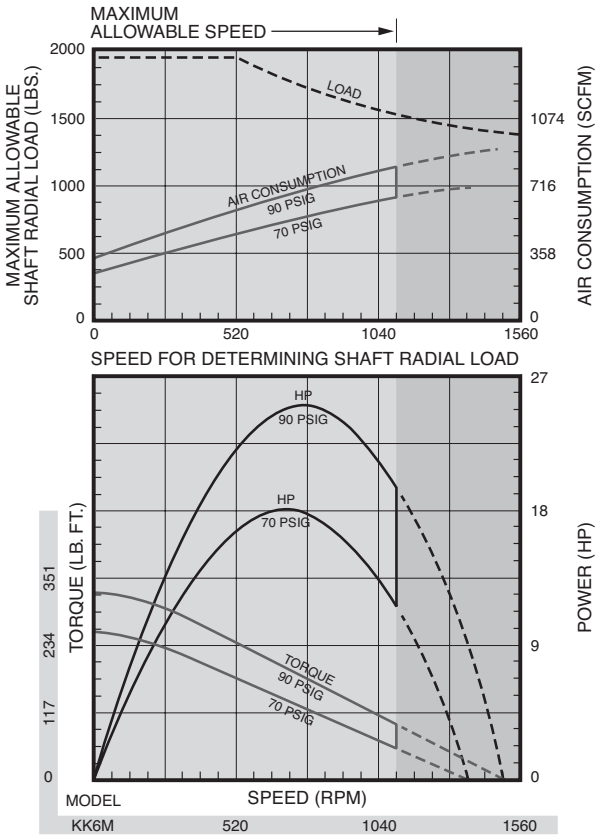
MAXIMUM
ALLOWABLE SPEED
MAXIMUM ALLOWABLE
SHAFT RADIAL LOAD (LBS.)
2000
1500
1000
500
0
LOAD
AIR CONSUMPTION
90 PSIG
70 PSIG
1074
716
358
0
AIR CONSUMPTION (SCFM)
0
520
1040
1560
SPEED FOR DETERMINING SHAFT RADIAL LOAD
27
18
9
0
HP
90 PSIG
HP
70 PSIG
TORQUE
90 PSIG
70 PSIG
351
234
117
0
TORQUE (LB. FT.)
POWER (HP)
MODEL
SPEED (RPM)
KK6M
520
1040
1560

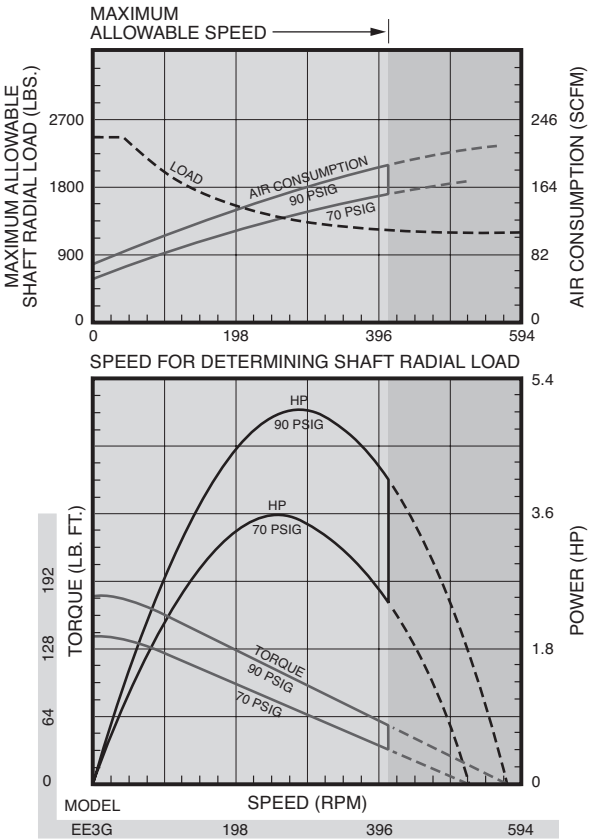
MAXIMUM
ALLOWABLE SPEED
MAXIMUM ALLOWABLE
SHAFT RADIAL LOAD (LBS.)
2700
1800
900
0
LOAD
AIR CONSUMPTION
90 PSIG
70 PSIG
246
164
82
0
AIR CONSUMPTION (SCFM)
0
198
396
594
SPEED FOR DETERMINING SHAFT RADIAL LOAD
5.4
3.6
1.8
0
HP
90 PSIG
HP
70 PSIG
TORQUE
90 PSIG
70 PSIG
192
128
64
0
TORQUE (LB. FT.)
POWER (HP)
MODEL
SPEED (RPM)
EE3G
198
396
594

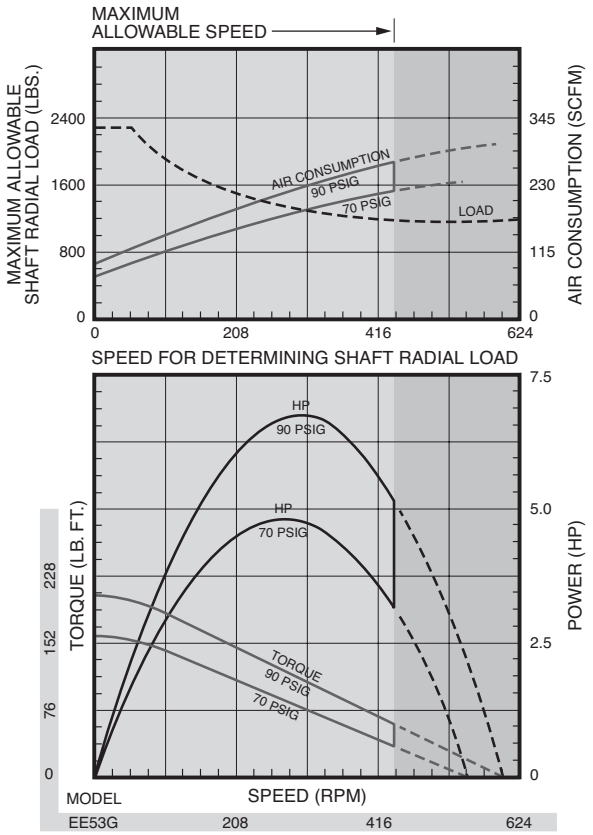
MAXIMUM
ALLOWABLE SPEED
MAXIMUM ALLOWABLE
SHAFT RADIAL LOAD (LBS.)
2400
1600
800
0
0
208
416
624
AIR CONSUMPTION
90 PSIG
70 PSIG
LOAD
345
230
115
0
AIR CONSUMPTION (SCFM)
SPEED FOR DETERMINING SHAFT RADIAL LOAD
HP
90 PSIG
HP
70 PSIG
TORQUE
90 PSIG
70 PSIG
TORQUE (LB. FT.)
228
152
76
0
7.5
5.0
2.5
0
POWER (HP)
MODEL
SPEED (RPM)
EE53G
208
416
624

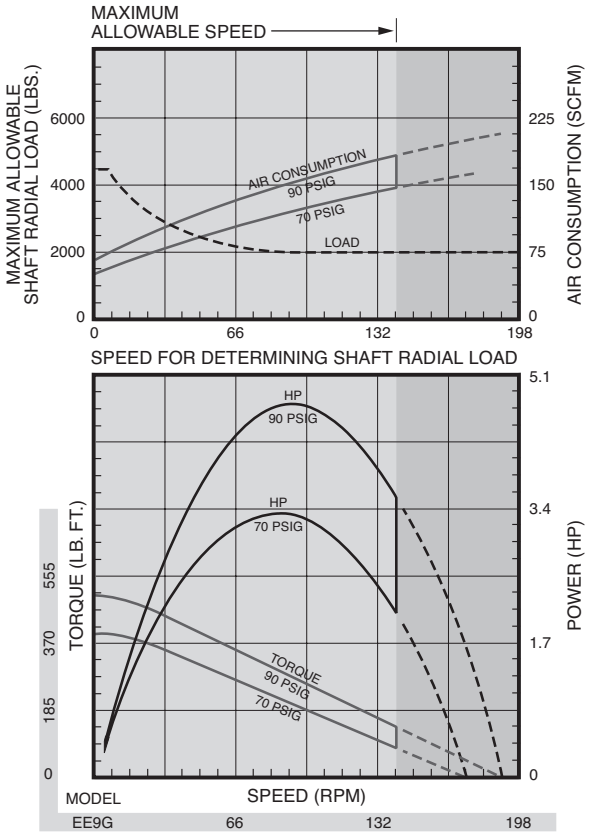
MAXIMUM
ALLOWABLE SPEED
MAXIMUM ALLOWABLE
SHAFT RADIAL LOAD (LBS.)
6000
4000
2000
0
0
66
132
198
AIR CONSUMPTION
90 PSIG
70 PSIG
LOAD
225
150
75
0
AIR CONSUMPTION (SCFM)
SPEED FOR DETERMINING SHAFT RADIAL LOAD
HP
90 PSIG
HP
70 PSIG
TORQUE
90 PSIG
70 PSIG
TORQUE (LB. FT.)
555
370
185
0
5.1
3.4
1.7
0
POWER (HP)
MODEL
SPEED (RPM)
EE9G
66
132
198

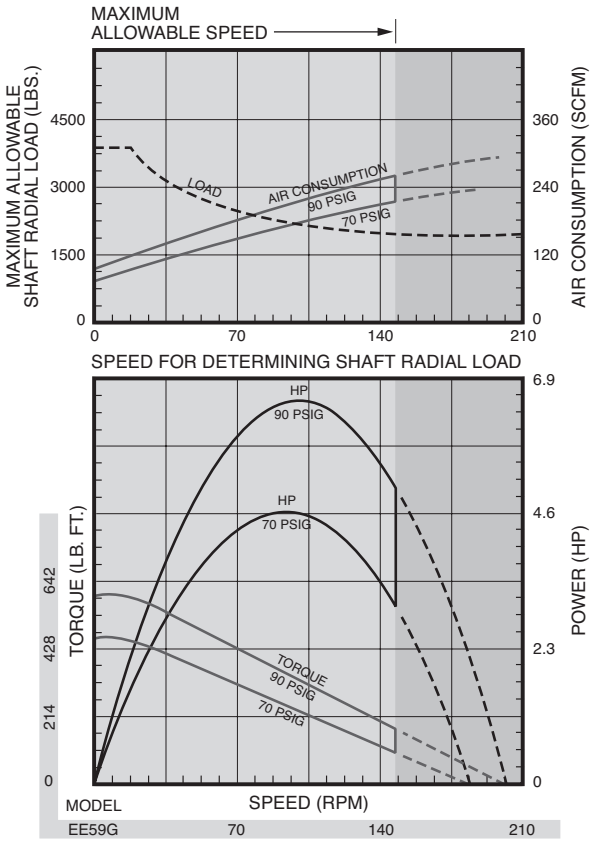
MAXIMUM
ALLOWABLE SPEED
MAXIMUM ALLOWABLE
SHAFT RADIAL LOAD (LBS.)
4500
3000
1500
0
0
70
140
210
LOAD
AIR CONSUMPTION
90 PSIG
70 PSIG
360
240
120
0
AIR CONSUMPTION (SCFM)
SPEED FOR DETERMINING SHAFT RADIAL LOAD
HP
90 PSIG
HP
70 PSIG
TORQUE
90 PSIG
70 PSIG
TORQUE (LB. FT.)
642
428
214
0
6.9
4.6
2.3
0
POWER (HP)
MODEL
SPEED (RPM)
EE59G
70
140
210

DIRECT DRIVE PISTON AIR MOTORS

DIMENSIONS

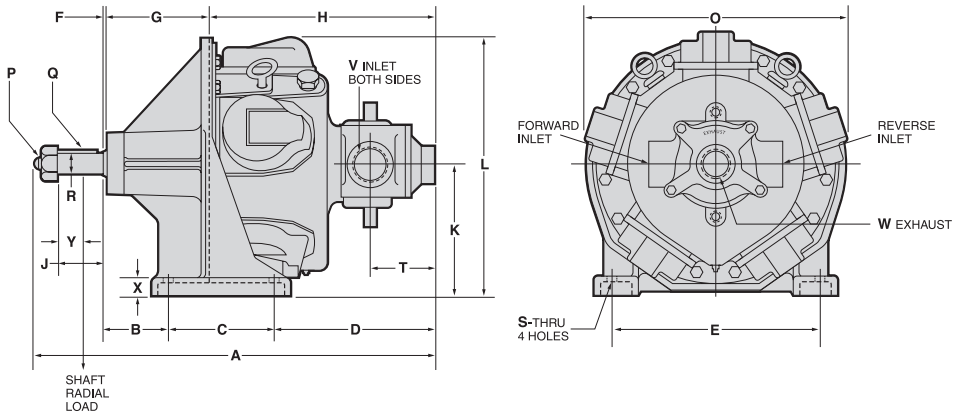

DIMENSIONS IN INCHES

Model	A	B	C	D	E	F	G	H	J	K	L	O	P** Thd.	Q Key	R*	S Dia.	T	V NPT	W NP	X	Y
CCM, DD6M	23 9/16	3 3/4	7 3/4	7 7/8	10 1/2	25/32	7 13/32	11 3/16	3	8 3/4	15 5/8	13 3/4	1"-8	1/4 x 1/4	1.125	25/32	2 11/16	3/4	1	7/8	2 11/16
EEM, EE5M	27	3 13/16	9 3/4	9 9/32	12 1/2	25/32	9 17/32	12 17/32	3	9 5/16	16 13/16	15	1"-8	1/4 x 1/4	1.125	25/32	2 15/16	1	1	7/8	2 11/16
HHM	24 3/16	4 5/16	7	9 7/8	13 1/2	3/16	7	14	3	8 7/8	17 1/4	17 1/4	+	3/8 x 3/8	1.375	21/32	3 13/16	1	1 1/4	1 1/4	1 5/16
HH5M	24 4/16	4 5/16	7	9 7/8	13 1/2	3/16	7	14	3	8 7/8	17 1/4	17 1/4	+	3/8 x 3/8	1.375	21/32	3 13/16	1 1/4	1 1/4	1 1/4	1 5/16
KK6M	30 1/4	4 3/4	8 5/8	12 5/8	13 1/2	1/8	7 11/16	18 3/16	4 1/4	12 1/8	22 1/4	22	+	3/8 x 3/8	1.625	21/32	4 5/16	1 1/4	1 1/2	1 3/8	1 7/8

+ The end of the shaft is not threaded on these Motors and no nut is used. *Tolerance: +0 -.0005" **Thd.–UNC2A.

DIMENSIONS IN MILLIMETERS

Model	A	B	C	D	E	F	G	H	J	K	L	O	P** Thd.	Q Key	R*	S Dia.	T	X	Y
CCM, DD6M	599	95	197	200	267	20	188	284	76	222	397	349	1"-8	6 x 6	28	20	68	22	68
EEM, EE5M	686	97	248	236	318	20	242	318	76	237	427	381	1"-8	6 x 6	28	20	75	22	68
HHM	614	110	178	251	343	5	178	356	76	225	438	438	+	10 x 10	35	17	97	32	33
HH5M	614	110	178	251	343	5	178	356	76	225	438	438	+	10 x 10	35	17	97	32	33
KK6M	768	121	219	321	343	3	195	462	108	308	565	559	+	10 x 10	41	17	110	35	48

+ The end of the shaft is not threaded on these Motors and no nut is used. *Tolerance: +0 -0.13mm

GEARED DRIVE PISTON AIR MOTORS

DIMENSIONS

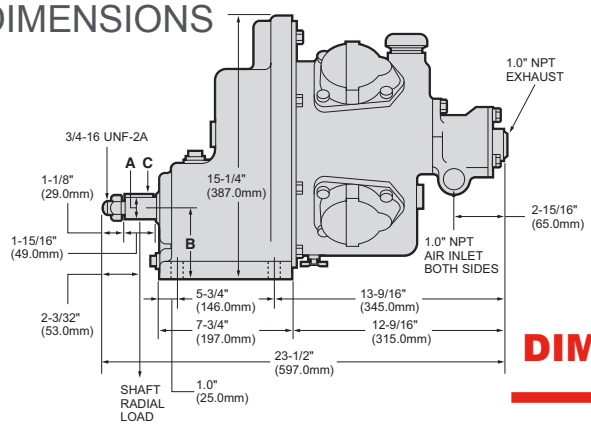

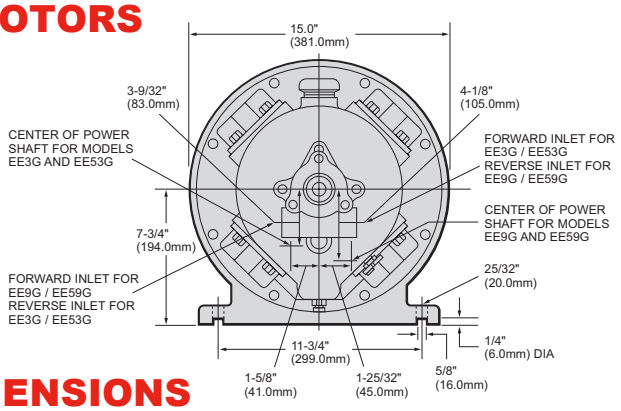

Models	A*		B		Key C	
	in	mm	in	mm	in	mm
EE3G, EE53G	1.251	31.78	4 15/32	114	1/4 x 1/4 x 1 25/32	6 x 6 x 45
EE9G, EE59G	1.501	38.13	3 5/8	92	3/8 x 3/8 x 1 11/16	10 x 10 x 43

*Tolerance: +0 -.0005" (0.13mm)

MMP150 AIR MOTORS MODEL CODE EXPLANATION

Example: MMP150-A-0-B-2-A — **MMP150 - A 0 B 2 A**

Series: **MMP150 Air Motor**

Interface/Shaft Options:

- **A = Standard Spline**
- D = Keyed Shaft (Fenner RM410)

Mounting Options:

- **0 = Standard**
- 1 = Base Mount

Control Options:

- A = None
- **B = Manual Valve**
- C = Panel Mount Valve
- D = Pendant
- E = Accu-Trol™

Rotary Valve Bias Options:

- 1 = CCW (counter-clockwise), Standard Bias Rotation*
- **2 = CW (clockwise), Reverse Bias Rotation***

Power Options:

- **A = Air**
- B = Natural Gas

*As viewed from crankshaft end of motor.

PERFORMANCE

Model	Max. Power		Speed at Max. Power	Free Speed	Starting Torque		Stall Torque		Air Consumption at Max. Power	
	hp	kw	rpm	rpm	lb-ft	Nm	lb-ft	Nm	scfm	m^3/m
MMP 150	16.0	11.9	1,800	3,800	61.0	82.7	78.0	105.8	350	12.0

Performance figures are at 90 psig (6.2 Bar) air pressure.

Figure 1: MMP150 Air Motor Performance
425 cfm Air Supply at 90 psi

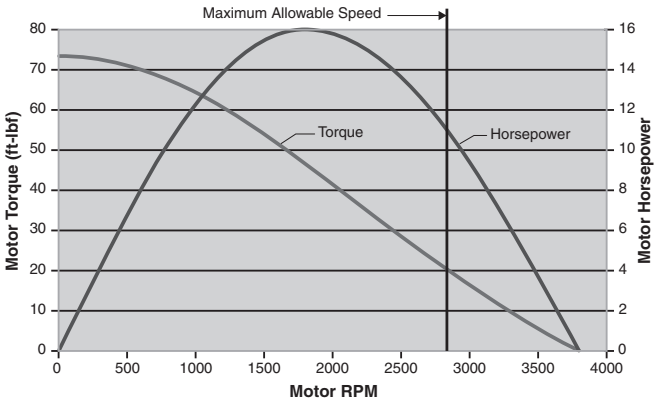

Figure 2: MMP150 Air Motor Performance

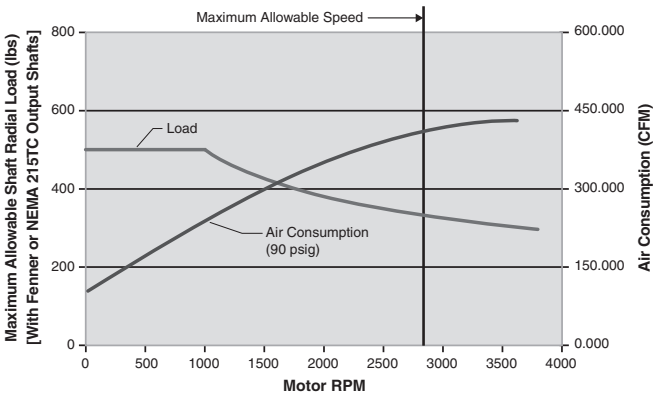

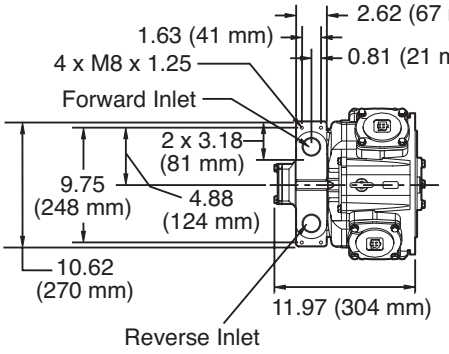

STANDARD MOTOR CONFIGURATION

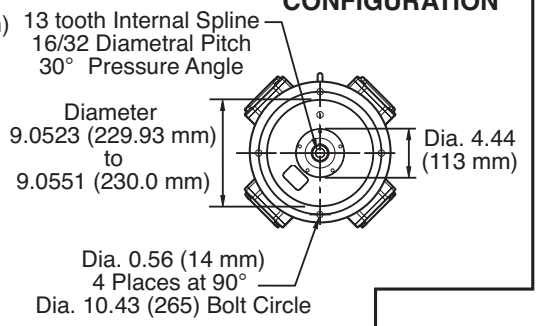

BASE MOUNT OPTION

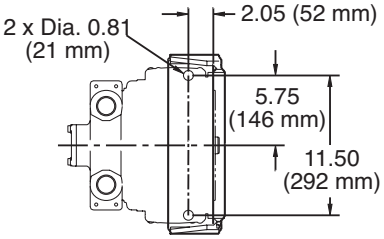

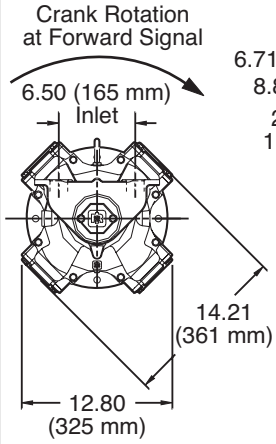

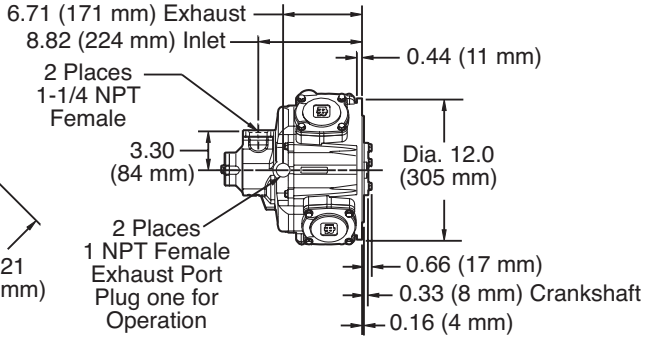

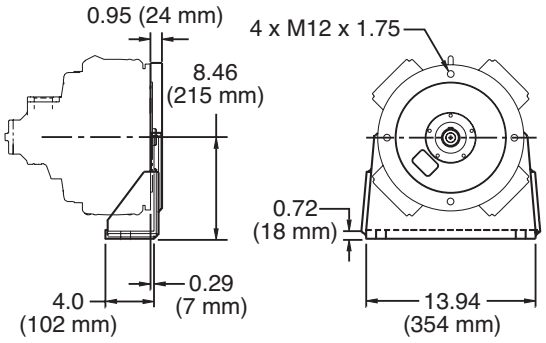

FENNER OPTION

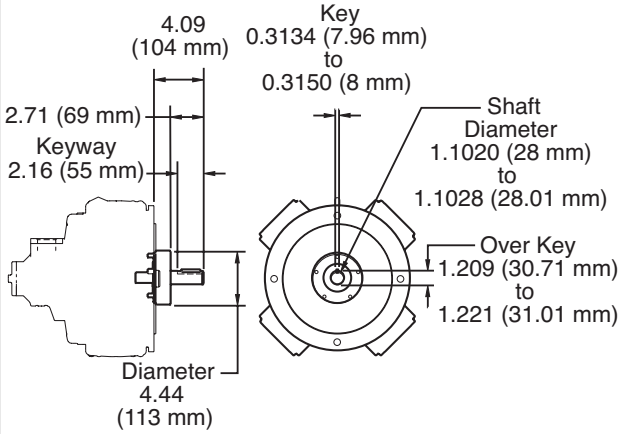

MANUAL CONTROL VALVE OPTION

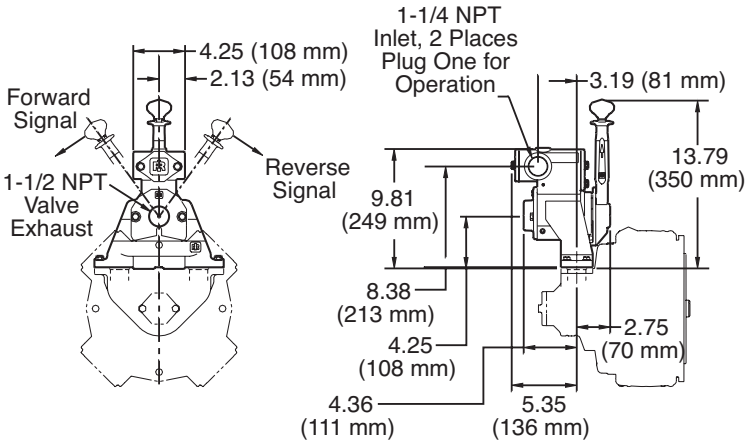

KK5B PISTON MOTORS
SPECIFICATIONS

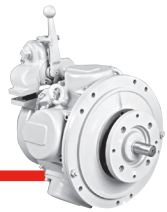

Model	Max. Power		Speed at Max. Power	Free Speed ▲	Starting Torque		Stall Torque		Air Consumption at Max. Power		Weight	
	hp	kw	rpm	rpm	lb-ft	Nm	lb-ft	Nm	scfm	m^3/m	lb	kg
REVERSIBLE												
KK5B546	29	21.6	900	1,800	183	248	300	407	795	22.5	–	–
KK5B550	30	22.3	880	1,750	202	274	325	441	850	24.1	–	–

▲ ALL models must be operated with sufficient load to prevent speed from exceeding maximum allowable speed shown on performance curve. Performance figures are at 90 psig (620 kPa) air pressure.

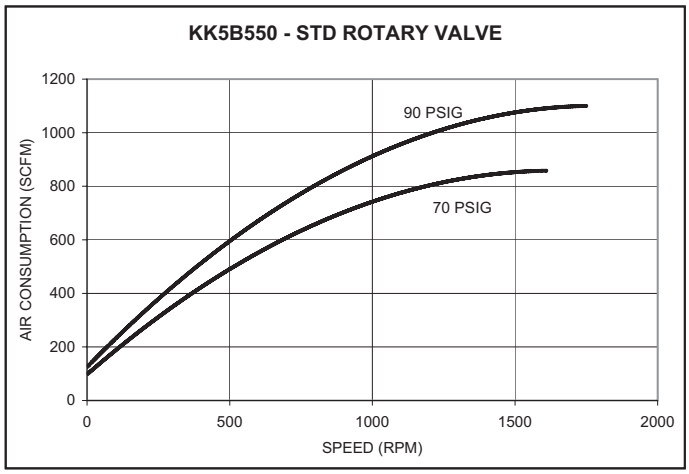

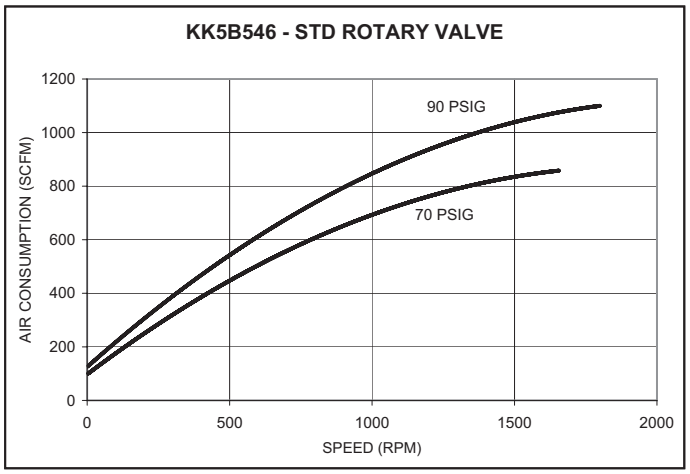

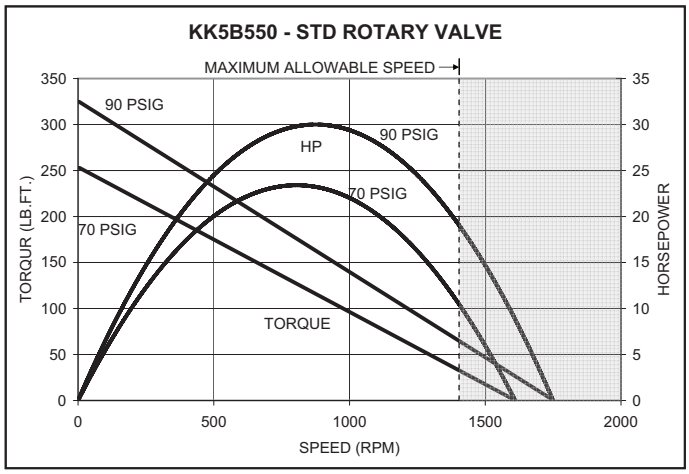

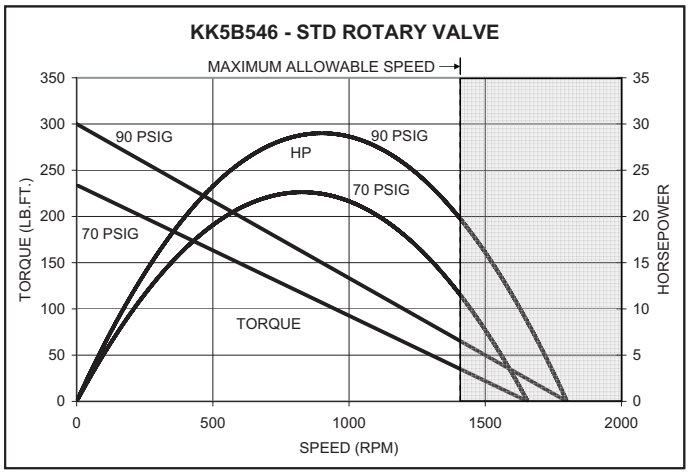

KK5B PISTON AIR MOTORS

MODEL NUMBER SYMBOLIZATION

KK5B550	B	2	B	0	A
Motor size Options	Mounting Options	Output Shaft Options	Control Options	Controller Options	Rotary Valve Options

EXAMPLE

KK5B550-B2B0A

- Rotary Valve Option **A** – Equal Powered
- Controller Option **0** – None
- Control Option **B** – Manual Throttle
- Output Shaft Option **2** – Keyed Shaft 1⅝" Dia.
- Mounting Option **B** – Base Mount
- Motor Option **550** – 30 HP Motor

Option	Code	Description	Weight		Part Number
			lb	kg	
Motor Options	546	29 Horsepower Motor	251	113	KK5B546
	550	30 Horsepower Motor	251	113	KK5B550
Mounting Options	A	Flange Mount, STD with SAE C 2 & 4 Bolt Mount			Standard
	B	Base Mount, Stationary Mounting	45	20	K5B - Foot
Output Shaft Options	0	*SAE C, STD with SAE C 14 Tooth Female Spline Input			Standard
	1	**NEMA 213TC and 215TC, Keyed Shaft 1 3/8″ dia.	13	6	K5B - NEMA - 213
	2	***Keyed Shaft 1 5/8″ dia.	24	11	K5B - Shaft - 1.625
Control Options	A	None			Standard
	B	Manual Throttle, Control Mounted Directly on Motor	19	19	K5B - Manual
	C	Pilot Air Control, Required for Remote Controller Options	9	4	K5B - Pilot
Controller Options	0	None			Standard
	1	Pendant Control, STD 2 Button Pendant			MLK-K269C
	2	Panel Control, Required for Remote Stationary Mounted Control			UWD-A686
Rotary Valve Options	A	Equal Powered			Standard
	B	Biased Powered CCW			POA
	C	Biased Powered CW			POA

*Flange Gasket Required **Single Bearing Mount ***Double Bearing Mount

EXAMPLE KK5B550 — B2A0A ARRANGEMENT

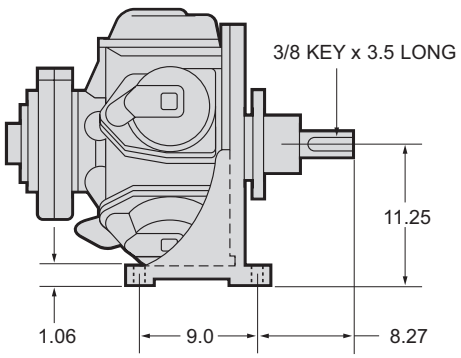

KK5B MOTOR

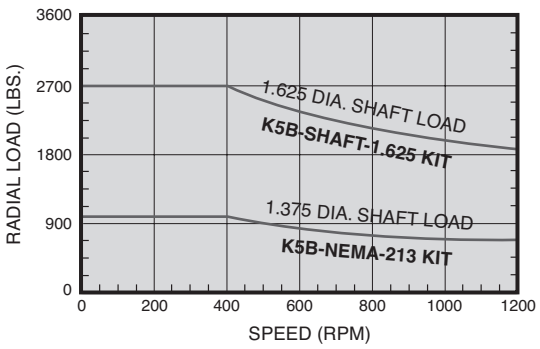

KK5B PISTON AIR MOTOR

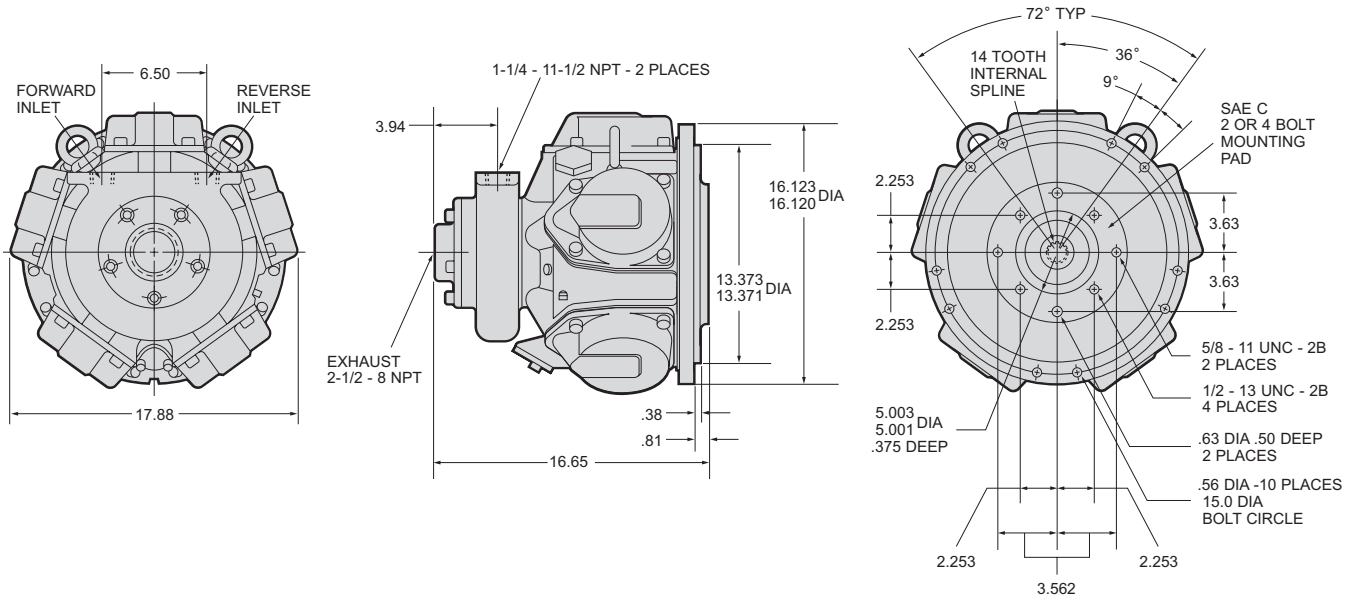

TOP AND SIDE VIEWS

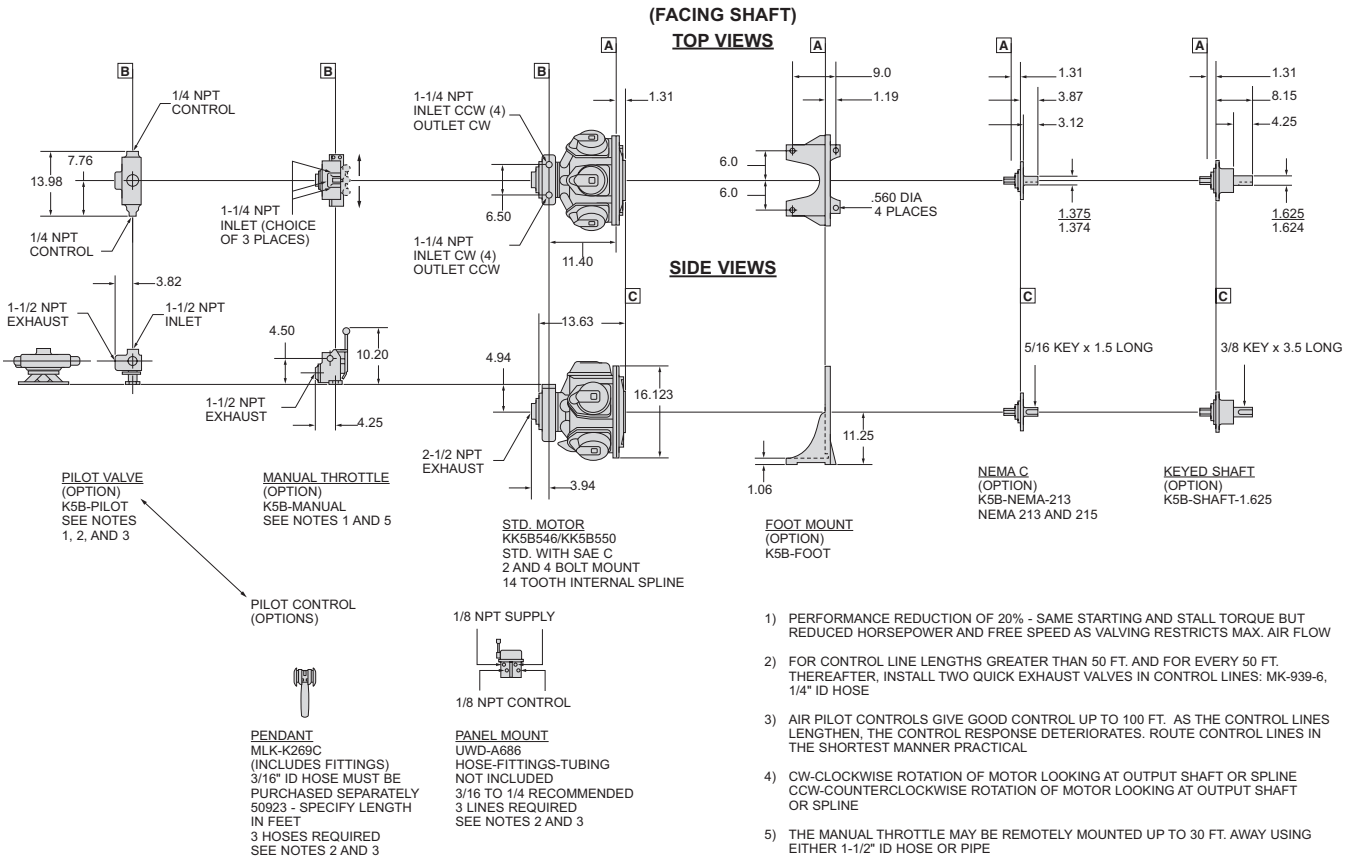

1) PERFORMANCE REDUCTION OF 20% - SAME STARTING AND STALL TORQUE BUT REDUCED HORSEPOWER AND FREE SPEED AS VALVING RESTRICTS MAX. AIR FLOW

2) FOR CONTROL LINE LENGTHS GREATER THAN 50 FT. AND FOR EVERY 50 FT. THEREAFTER, INSTALL TWO QUICK EXHAUST VALVES IN CONTROL LINES: MK-939-6, 1/4" ID HOSE

3) AIR PILOT CONTROLS GIVE GOOD CONTROL UP TO 100 FT. AS THE CONTROL LINES LENGTHEN, THE CONTROL RESPONSE DETERIORATES. ROUTE CONTROL LINES IN THE SHORTEST MANNER PRACTICAL

4) CW-CLOCKWISE ROTATION OF MOTOR LOOKING AT OUTPUT SHAFT OR SPLINE CCW-COUNTERCLOCKWISE ROTATION OF MOTOR LOOKING AT OUTPUT SHAFT OR SPLINE

5) THE MANUAL THROTTLE MAY BE REMOTELY MOUNTED UP TO 30 FT. AWAY USING EITHER 1-1/2" ID HOSE OR PIPE

COMPONENTS, EQUIPMENT AND ACCESSORIES FILTERS, REGULATORS AND LUBRICATORS

Ingersoll Rand and ARO filters, regulators and lubricators give increased motor performance, reduce repair costs and extend motor life.

FILTERS

Motor Series	Motor Inlet Size	Part No.	NPT Size	Flow Rate scfm	Bowl Capacity oz	Height in	Width in	Depth in
M002, SM1AM, SM1UP	1/8″	F35121-420	1/4″	49	0.7	4.30	2.00	2.00
0, 2200, M004, M007, M0V005AA, SM2AM	1/4″	F35221-410	1/4″	73	1.20	6.00	2.30	2.30
SM4AM	1/4″	F35231-410	3/8″	107	1.20	6.00	2.30	2.30
1801, 1841	3/8″	F35331-410	3/8″	150	2.40	7.00	2.80	2.80
17RA, 17RB, MVA017	3/8″	F35341-410	1/2″	190	2.40	7.00	2.80	2.80
3800, 3840, 4800, 4840, 48RA, 48RB, 22N51-W/RC, SM6AM	1/2″	F35341-410	1/2″	190	2.40	7.00	2.80	2.80
SM8AM	1/2″	F35351-410	3/4″	211	2.40	7.00	2.80	2.80
34RA, 34RB, MVA034	1/2″	F35461-410	1″	297	5.30	10.75	3.60	3.90
551, CCM, DD6M	3/4	F35451-410	3/4″	273	5.30	10.75	3.60	3.90
92RA, 92RB, 92RM, 992RM, EEM, EE5M, HHM, EE3G, EE9G, EE53G, EE59G	1″	F35461-410	1″	297	5.30	10.75	3.60	3.90
HH5M	1″	F42-0A-000	1¼″	860	13.00	14.90	8.50	8.50
KK6M, MMP150, M0V075AA	1¼″	F42-0A-000	1¼″	860	13.00	14.90	8.50	8.50
KK5B546, KK5B550	1¼″	F35-0B-C28	1½″	1,280	12.50	19.00	7.80	7.80





REGULATORS

Motor Series	Motor Inlet Size	Part No.	NPT Size	Flow Rate scfm	Adj. Pressure Range psi	Height in	Width in	Depth in
M002, SM1AM, SM1UP	1/8″	R37121-600	1/4″	55	5-250	3.50	2.90	2.00
M004, M007, M0V005AA, SM2AM	1/4″	R37221-600	1/4″	73	5-250	4.75	2.20	2.70
SM4AM	1/4″	R37231-600	3/8″	84	5-250	4.75	2.20	2.70
1801, 1841	3/8″	R37331-600	3/8″	167	5-250	5.50	3.20	2.80
17RA, 17RB, MVA017	3/8″	R37341-600	1/2″	198	5-250	5.50	3.20	2.80
3800, 3840, 4800, 4840, 48RA, 48RB, 22N51-W/RC, SM6AM	1/2″	R37341-600	1/2″	198	5-250	5.50	3.20	2.80
34RA, 34RB, MVA034, SM8AM	1/2″	R37351-600	3/4″	200	5-250	5.50	3.20	2.80
551, CCM, DD6M	3/4″	R37451-600	3/4″	290	5-250	7.00	3.50	4.00
92RA, 92RB, 92RM, 992RM, EEM, EE5M, HHM, EE3G, EE9G, EE53G, EE59G	1″	R37461-600	1″	290	5-250	7.00	3.50	4.00
HH5M	1″	R30-0A-G00	1¼″	800	5-125	10.30	4.30	4.30
KK6M, MMP150, M0V075AA	1¼″	R30-0A-G01	1¼″	1,200	5-125	10.30	4.30	4.30
KK5B546, KK5B550	1¼″	R40-0B-G00	1½″	1,200	5-125	11.90	5.30	5.30





COMPONENTS, EQUIPMENT AND ACCESSORIES FILTERS, REGULATORS AND LUBRICATORS

LUBRICATORS





Motor Series	Motor Inlet Size	Part No.	NPT Size	Flow Rate scfm	Bowl Capacity oz	Height in	Width in	Depth in
M002, SM1AM, SM1UP	1/8″	L36121-120	1/4″	57	0.50	5.00	2.00	2.00
M004, M007, M0V005AA, SM2AM	1/4″	L36221-110	1/4″	51	1.50	6.00	2.25	2.25
SM4AM	1/4″	L36231-110	3/8″	105	1.50	6.00	2.25	2.25
1801, 1841	3/8″	L36331-110	3/8″	85	4.00	7.70	2.75	2.90
17RA, 17RB, MVA017	3/8″	L36341-110	1/2″	156	4.00	7.70	2.75	2.90
3800, 3840, 4800, 4840, 48RA, 48RB, SM6AM, 22N51-W/RC	1/2″	L36341-110	1/2″	156	4.00	7.70	2.75	2.90
SM8AM	1/2″	L36351-110	3/4″	222	4.00	7.70	2.75	2.90
34RA, 34RB, MVA034	1/2″	L36461-110	1″	332	4.00	10.00	3.60	3.90
551, CCM, DD6M	3/4″	L36451-110	3/4″	368	4.00	10.00	3.60	3.90
92RA, 92RB, 92RM, 992RM, EEM, EE5M, HHM, EE3G, EE9G, EE53G, EE59G	1″	L36461-110	1″	332	4.00	10.00	3.60	3.90
HH5M	1″	L40-0A-000	1 1/4″	927	26.00	11.61	5.50	5.00
KK6M, MMP150, M0V075AA	1 1/4″	L40-0A-000	1 1/4″	927	26.00	11.61	5.50	5.00
KK5B546, KK5B550	1 1/4″	L40-0B-000	1 1/2″	927	26.00	11.61	5.50	5.00

IR AND ARO COMBINATION FRLs (FILTER/REGULATOR/LUBICATOR)

Motor Series	Motor Inlet Size	Part No.	NPT Size	Flow Rate scfm	Adj. Pressure Range psi	Bowl Capacity oz	Height in	Width in	Depth in
M002, SM1AM, SM1UP	1/8″	C38121-820	1/4″	46	5-250	FILTER = 0.4 LUBRICATOR = 0.4	5.20	4.75	3.20
M004, M007, M0V005AA, SM2AM	1/4″	C38221-810	1/4″	51	5-250	FILTER = 1.2 LUBRICATOR = 1.5	6.60	6.60	3.20
SM4AM	1/4″	C38231-810	3/8″	63	5-250	FILTER = 1.2 LUBRICATOR = 1.5	6.60	6.60	3.20
1801, 1841	3/8″	C38331-810	3/8″	99	5-250	FILTER = 2.4 LUBRICATOR = 3.7	7.70	8.70	3.60
17RA, 17RB, MVA017	3/8″	C38341-810	1/2″	150	5-250	FILTER = 2.4 LUBRICATOR = 3.7	7.70	8.70	3.60
3800, 3840, 22N51-W/RC	1/2″	C38341-810	1/2″	150	5-250	FILTER = 2.4 LUBRICATOR = 3.7	7.70	8.70	3.60
4800, 4840, 48RA, 48RB, SM6AM	1/2″	C38341-810	1/2″	150	5-250	FILTER = 2.4 LUBRICATOR = 3.7	7.70	8.70	3.60
SM8AM	1/2″	C38351-810	3/4″	155	5-250	FILTER = 2.4 LUBRICATOR = 3.7	7.70	8.70	3.60
34RA, 34RB, MVA034	1/2″	C38461-810	1″	215	5-250	FILTER = 5.3 LUBRICATOR = 3.2	10.75	11.10	4.30
551, CCM, DD6M	3/4″	C38451-810	3/4″	199	5-250	FILTER = 5.3 LUBRICATOR = 3.2	10.75	11.10	4.30
92RA, 92RB, 92RM, 992RM, EEM, EE5M, HHM, EE3G, EE9G, EE53G, EE59G	1″	C38461-810	1″	215	5-250	FILTER = 5.3 LUBRICATOR = 3.2	10.75	11.10	4.30
HH5M	1″	Must use individual units							
KK5B546, KK5B550, KK6M, MMP150, M0V075AA	1/4″	Must use individual units							

LIQUIDATOR FILTERS

FILTERS

Female NPT	IR Part Number	Flow Rate scfm	Female NPT	IR Part Number	Flow Rate scfm
1/4″	8842-W1-035	35	1/4″	F25221-300	40
3/8″	8843-W1-035	35	3/8″	F25231-300	51
1/2″	8844-W1-090	90	1/2″	F25241-300	53
3/4″	8846-W1-090	90	3/4″	F25452-310	50
1″	8828-W2-000*	175	1″	F25462-310	150
1¼″	8830-W1-000	400	1¼″	F25472-310	150
2″	8834-W1-000	700			

LIQUIDATOR FILTERS

You can depend on Ingersoll Rand and ARO Liquidator Filters™ when you need clean, dry air and your regulator filter can't handle high volumes of liquid contaminants. Note that a lubricator should be installed between the air motor and the liquidator.

OILS

Part Number	Oil Number	Quantity	Recommended Use
10P 10G	10 10	1 pt 1 gal	Fractional horsepower Air Motors
50P 50G	50 50	1 pt 1 gal	One horsepower and larger Air Motors

GREASE

Part Number	Grease Number	Quantity lb	Recommended Use
28 1 lb 28 8 lb	28 28	1 8	Motor gearing and bearings

FEATURES

Two stage filtration cartridges remove 99% of liquid contaminants. One micron filter element removes 99% of all dirt particles 1 micron or larger. Quick release bowls enable easy cartridge replacement. Automatic float drain with manual override. Clear polycarbonate bowl with metal guard provides for quick inspection.

BENEFITS

- Reduces liquid contaminants
- Increases air motor life
- Cuts maintenance costs

LUBRICATION

Proper lubrication of air motors is a must to prevent excessive wear of moving parts; to prevent possible rust and corrosion of bare, unprotected surfaces. Ingersoll Rand oils and greases have been tested thoroughly and are recommended without reservation. Refer to Operation Manuals and Parts Lists for lubrication instructions.

AIR SYSTEM COMPONENTS FOR PNEUMATIC MOTORS

FILTERS



Motor Series	Motor Inlet Size	Part No.	NPT Size	Flow Rate scfm	Bowl Capacity oz	Height in	Width in	Depth in
0000	1/8″	F35111-420	1/8″	38	0.70	4.30	2.00	2.00
0	1/8″	F35121-420	1/4″	49	0.70	4.30	2.00	2.00
0, 2200	1/4″	F35221-410	1/4″	73	1.20	6.00	2.30	2.30
44	3/8″	F35331-410	3/8″	150	2.40	7.00	2.80	2.80

REGULATORS



Motor Series	Motor Inlet Size	Part No.	NPT Size	Flow Rate scfm	Adj. Pressure Rate psi	Height in	Width in	Depth in
0000	1/8″	R37111-600	1/8″	43	5-250	3.50	2.90	2.00
0	1/8″	R37121-600	1/4″	55	5-250	3.50	2.90	2.00
0, 2200	1/4″	R37221-600	1/4″	73	5-250	4.75	2.20	2.70
SM4AM	1/4″	R37231-600	3/8″	84	5-250	4.75	2.20	2.70
44	3/8″	R37331-600	3/8″	167	5-250	5.50	3.20	2.80

LUBRICATORS



Motor Series	Motor Inlet Size	Part No.	NPT Size	Flow Rate scfm	Bowl Capacity oz	Height in	Width in	Depth in
0000	1/8″	L36111-120	1/8″	32	0.50	5.00	2.00	2.00
0	1/8″	L36121-120	1/4″	57	0.50	5.00	2.00	2.00
0, 2200	1/4″	L36221-110	1/4″	51	1.50	6.00	2.25	2.25
SM4AM	1/4″	L36231-110	3/8″	105	1.50	6.00	2.25	2.25
44	3/8″	L36331-110	3/8″	85	4.00	7.70	2.75	2.90

IR AND ARO COMBINATION FRLs (FILTER/REGULATOR/LUBICATOR)





Motor Series	Motor Inlet Size	Part No.	NPT Size	Flow Rate scfm	Adj. Pressure Range psi	Bowl Capacity oz	Height in	Width in	Depth in
0000	1/8″	C38111-820	1/8″	34	5-250	FILTER = 0.4 LUBRICATOR = 0.4	5.20	4.75	3.20
0	1/8″	C38121-820	1/4″	46	5-250	FILTER = 0.4 LUBRICATOR = 0.4	5.20	4.75	3.20
0, 2200	1/4″	C38221-810	1/4″	51	5-250	FILTER = 1.2 LUBRICATOR = 1.5	6.60	6.60	3.20
44	3/8″	C38331-810	3/8″	99	5-250	FILTER = 2.4 LUBRICATOR = 3.7	7.70	8.70	3.60

Ingersoll Rand

ACCESSORIES
SELF-CLOSING VALVES

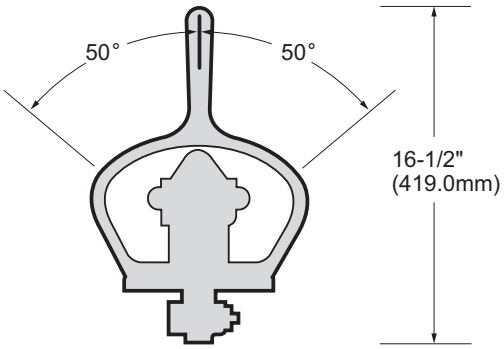

NO. EU-A685

Self-Closing 4-Way Valve. Air inlet pipe tap 3/4″ NPT, Motor connection pipe tap 1″ NPT, exhaust pipe tap 3/4″ NPT.

ONE-STOP REPLACEMENT COMPONENT SHOPPING?



ARO® motion control and air preparation components include the Alpha® valve, Economair® cylinder and Module Air® air prep lines. Routinely used throughout industry, these lines have made their own name for their precision, durability and overall efficiency.

fluids.ingersollrand.com • 1-800-276-4658

FRLCONNECT
Filter/Regulator/Lubricator Selection Guide

MUFFLERS

Part Number	MALE NPT Size
MRV003A010-RP	1/8″
MRV015A010-RP	1/4″
SRA010A1-A212	3/8″
MRV040A010-RP	1/2″
150BM-A674	1 1/4″
SS350-A674	1 1/2″
ST500-674	2″
SS800-A674	2 1/2″

TAPPED EXHAUST DEFLECTORS FOR PIPED AWAY EXHAUST

Motor Series	Part Name	Part Number	Pipe Tap NPT
1801 1841	Exhaust Deflector Assembly	R1801-A123	3/4″
3800 3840	Exhaust Deflector Assembly	R3800-A123	3/4″
4800 4840	Exhaust Deflector Assembly	R4800-A123	1″

VALVES

Part Number	Female NPT Size	Flow Rate	Description
E252LM	1/4″	26 scfm	3-Way Hand Lever/Manual Return
E212LM	1/4″	26 scfm	4-Way Hand Lever/Manual Return
E312LS	1/4″	26 scfm	4-Way, 3-Position Hand Lever, Spring Return
K214LM	1/2″	90 scfm	4-Way Hand Lever/Manual Return
K314LS	1/2″	90 scfm	4-Way, 3-Position Hand Lever, Spring Return
M512LR	1/4″	41 scfm	4-Way, 3-Position Rotary Lever, Manual Return
M513LR	3/8″	65 scfm	4-Way, 3-Position Rotary Lever, Manual Return
M514LR	1/2″	85 scfm	4-Way, 3-Position Rotary Lever, Manual Return

CUSTOMIZED AIR MOTORS

While there are over 300 standard Air Motors in the complete Ingersoll Rand line, we realize that even this broad selection won't fill every need, every time. Virtually all components of our motors, from output shafts and housings to gear ratios, can be modified. We welcome the opportunity to design and build Air Motors to our customers' specifications. Generally, annual quantities of 100 plus are cost-effective. However, the opportunity to quote on lower volumes is always welcomed. Frequently, custom designed Air Motors can reduce OEM costs by easing product assembly, increasing performance and avoiding the need to make special parts to incorporate the Air Motor in a product. We have the engineering capabilities to provide you with truly "turnkey" power units.

RECOMMENDED INSTALLATION FOR REVERSIBLE MODELS

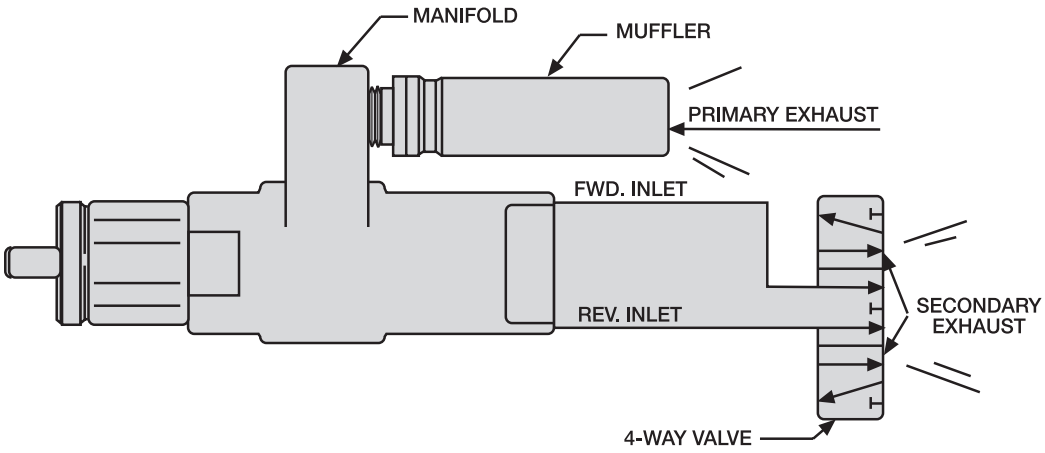

On reversible air motors there are two exhausts. The primary exhaust flows air out through the manifold and muffler as in the forward rotation motors. Depending on which direction the motor is running, the opposite inlet port becomes the secondary exhaust and must be opened to atmosphere. A four-way valve, 3-position, spring-centered is recommended for all reversible air motors. An exhaust muffler must be threaded into the exhaust port of each valve to comply with the second level regulations as outlined in the Occupational Safety and Health Act of 1970.

WARRANTY FOR PRODUCTS

Company, through its Reseller, warrants the Products to be free of defects in material and workmanship for a period of one year from the date of placing the Products in operation with the initial end customer or eighteen (18) months from the date of shipment, whichever occurs first. With respect to the sale of parts, such warranty period shall be six (6) months from the date of shipment from Company to Reseller.

Company will provide a new part or repaired part, at its election, in place of any part which is found upon Company's inspection to be defective in material and workmanship during the period described above as well as pay for reasonable, direct costs incurred by Reseller for shipping and labor related to the defective part. Such part will be repaired or replaced without charge to the initial end customer during normal working hours after evaluation by an Ingersoll Rand authorized Service Center. Initial end customer must present proof of purchase (and purchase date) at the time of exercising this warranty. Company will provide pre-paid postage and packaging if requested by the initial end customer.

This warranty does not apply to failures occurring as a result of abuse, misuse, negligent repairs, corrosion, erosion and normal wear and tear, alterations or modifications made to the Products without express written consent of Company, or failure to follow the recommended operating practices and maintenance procedures as provided in the product's operating and maintenance publications.

The warranty provided herein does not apply to Products sold by Company, through its Reseller, but not manufactured by Company. Such Products may be warranted by their respective manufacturers directly to the initial end customer.

THIS WARRANTY IS IN LIEU OF ALL OTHER WARRANTIES (EXCEPT OF TITLE), EXPRESSED OR IMPLIED, AND THERE ARE NO WARRANTIES OF MERCHANTABILITY OR OF FITNESS FOR A PARTICULAR PURPOSE.

LIMITATION OF LIABILITY

The remedies of the initial end customer set forth under the provisions of warranty outlined above are exclusive. The total liability of Company, or its Reseller, with respect to this sale or the Products and services furnished under this sale, in connection with the performance or breach of this warranty, or from the sale, delivery, installation, repair or technical direction covered by or furnished under this sale, whether based on contract, warranty, negligence, indemnity, strict liability or otherwise shall not exceed the purchase price of the unit or Products upon which such liability is based.

COMPANY AND ITS RESELLER SHALL IN NO EVENT BE LIABLE TO THE INITIAL END CUSTOMER, ANY SUCCESSORS IN INTEREST OR ANY BENEFICIARY OR ASSIGNEE RELATING TO THIS SALE FOR ANY CONSEQUENTIAL, INCIDENTAL, INDIRECT, SPECIAL OR PUNITIVE DAMAGES ARISING OUT OF THIS SALE OR ANY BREACH THEREOF, OR ANY DEFECTS IN, OR FAILURE OF, OR MALFUNCTION OF THE PRODUCTS UNDER THIS SALE WHETHER BASED UPON LOSS OF USE, LOST PROFITS OR REVENUE, INTEREST, LOST GOODWILL, WORK STOPPAGE, IMPAIRMENT OF OTHER GOODS, LOSS BY REASON OF SHUTDOWN OR NON-OPERATION, INCREASED EXPENSES OF OPERATION, COST OF PURCHASE OF REPLACEMENT POWER OR CLAIMS OF USER OR CUSTOMERS OF THE USER FOR SERVICE INTERRUPTION WHETHER OR NOT SUCH LOSS OR DAMAGE IS BASED ON CONTRACT, WARRANTY, NEGLIGENCE, INDEMNITY, STRICT LIABILITY OR OTHERWISE.

Index

Model Number	Page
0	
0-Series	18, 19, 20, 21, 22, 66, 67
0/2200-Series	21, 22, 23
000-Series	13, 14, 64, 65
1	
10G	89
10P	89
150BM-A674	54, 91
17RA005	43, 44
17RA008	43, 44
17RA014	43, 44
17RA017	43, 44
17RA022	43, 44
17RB029	43, 44
17RB036	43, 44
17RB045	43, 44
17RB078	43, 44
1801N	35, 36
1801P	35, 36
1801Q	35, 36
1801U	35, 36
1801W	35, 36
1841N	35, 36
1841P	35, 36
1841Q	35, 36
1841U	35, 36
1841W	35, 36
2	
2200/44-Series	34
2200-Series	29, 30, 31, 32, 68, 69, 70, 71
22N51-W/RC	74, 86, 87, 88
28 1 LB	89
28 8 LB	89
3	
31812-1	64, 66
31812-2	64, 66
31812-3	64, 66
31812-4	64, 66
31812-5	64, 66
31812-6	64, 66
31812-7	64, 66
31812-8	64, 66
32968-1	68
32968-2	68
32968-3	68
32968-4	68
32968-5	68
32968-6	68
32968-7	68
32968-8	68
32968-9	68
34RA005	43, 45
34RA008	43, 45
34RA011	43, 45
34RA014	43, 45
34RA017	43, 45
34RA022	43, 45
34RB029	43, 45
34RB036	43, 45
34RB045	43, 45
34RB078	43, 45
35264-1	72
35264-2	72
35264-3	72
35264-4	72
35264-5	72
35264-6	72
35264-7	72
35264-8	72
35264-9	72
3800M	37, 38
3800P	37, 38
3800Q	37, 38
3800R	37, 38
3800S	37, 38
3800U	37, 38
3840M	37, 38
3840P	37, 38
3840Q	37, 38
3840R	37, 38
3840S	37, 38
3840U	37, 38
4	
44-Series	33, 34, 39, 40, 72, 73
4800D	41, 42
4800K	41, 42
4800M	41, 42
4800N	41, 42
4800P	41, 42
4800Q	41, 42
4800S	41, 42
4800U	41, 42
4840D	41, 42
4840K	41, 42
4840M	41, 42
4840N	41, 42
48RA008	46
48RA011	46
48RA014	46
48RA017	46
48RA022	46
48RB029	46
48RB036	46
48RB045	46
48RB078	46

Index

Model Number	Page
5	
50G	89
50P	89
551SM51-W/RC	75
551SO51-W/RC	75
7	
7533-2-B	64, 65
7533-B	13
7534-2-B	64, 65
7534-B	13
7535-2-C	64, 65
7535-C	13
7536-2-B	64, 65
7536-B	13
7537-2-C	64, 65
7537-C	13
7538-B	13
7539-B	13
7540-B	13
7541-B	13
7542-C	13
7543-B	13
7544-B	13
7545-B	13
7546-B	13
7547-C	13
7800-1B	31, 32
7800-2B	68, 69
7800-3B	70
7800-4B	71
7800-B	29
7801-1B	31, 32
7801-2B	68, 69
7801-3B	70
7801-4B	71
7801-B	29
7802-1B	31-32
7802-2B	68, 69
7802-3B	70
7802-4B	71
7802-B	29
7803-1B	31, 32
7803-2B	68, 69
7803-3B	70
7803-4B	71
7803-B	29
7804-1B	31, 32
7804-2B	68, 69
7804-3B	70
7804-4B	71
7804-B	29
7805-1B	31, 32
7805-2B	69
7805-3B	70
7805-4B	71
7805-B	29

Model Number	Page
7806-1B	31, 32
7806-B	29
7807-1B	31, 32
7807-B	29
7808-1B	31, 32
7808-B	29
7809-1B	31, 32
7809-B	29
7810-1B	31, 32
7810-B	29
7811-1B	31, 32
7811-B	29
7812-1B	31, 32
7812-B	29
7813-1B	31, 32
7813-B	29
814-1B	31, 32
7814-B	29
7815-1B	31, 32
7815-B	29
7816-1B	31, 32
7816-B	29
7817-1B	31, 32
7817-B	29
8	
8200-4A	72, 73
8200-4A-( )	72
8200-A	39, 40
8201-4A	72, 73
8201-4A-( )	72
8201-A	39, 40
8202-4A	72, 73
8202-4A-( )	72
8202-A	39, 40
8203-4A	72, 73
8203-4A-( )	72
8203-A	40
8204-4A	72, 73
8204-4A-( )	72
8204-A	39, 40
8205-4A	72, 73
8205-4A-( )	72
8205-A	39, 40
8206-A	39, 40
8207-A	39, 40
8208-A	39, 40
8209-A	39, 40
8210-A	39, 40
8211-A	39, 40
8226-10A	21
8226-11A	21
8226-12A	21
8226-13A	21
8226-14A	21
8226-6A	21
8226-7A	21
8226-8A	21

Index

Model Number	Page
8228-10B	21
8228-11B	21
8228-12B	21
8228-13B	21
8228-14B	21
8228-2B	21
8228-3B	21
8228-5B	21
8228-6B	21
8228-7B	21
8228-8B	21
8228-9B	21
8229-1A	18, 19, 66
8229-2A	18, 19, 66
8229-3A	18, 19, 66
8229-4A	18, 19, 66
8229-5A	18, 19, 66
8229-6A	18, 19, 66
8229-7A	18, 19, 66
8229-8A	18, 19, 66
8229-9A	18, 19, 66
8230-1A	18, 19, 66
8230-2A	18, 19, 66
8230-3A	18, 19, 66
8230-4A	18, 19, 66
8230-5A	18, 19, 66
8230-6A	18, 19, 66
8230-7A	18, 19, 66
8230-8A	18, 19, 66
8230-9A	18, 19, 66
8231-1B	18, 19
8231-2B	18, 19
8231-3B	18, 19
8231-4B	18, 19
8231-5B	18, 19
8231-6B	18, 19
8231-7B	18, 19
8231-8B	18, 19
8231-9B	18, 19
8232-( )	67
8232-1	19, 66
8232-2	19, 66
8232-3	19, 66
8232-4	19, 66
8232-5	19, 66
8232-6	19, 66
8232-7	19, 66
8274-1A	31,33
8274-2A	31,33
8274-3A	31,33
8274-4A	31,33
8274-5A	31,33
8274-6A	31,33

Model Number	Page
8274-A	31,33
8276-1A	31,33
8276-2A	31,33
8276-3A	31,33
8276-4A	31,33
8276-5A	31,33
8276-6A	31,33
8828-W2-000	89
8830-W1-000	89
8834-W1-000	89
8842-W1-035	89
8843-W1-035	89
8844-W1-090	89
8846-W1-090	89

9

92RA005	48
92RA008	48
92RA011	48
92RA014	48
92RA017	48
92RA022	48
92RB029	48
92RB036	48
92RB045	48
92RB078	48
92RM1	48
92RM2	48
992RM1	48

C

C38111-820	90
C38121-820	88, 90
C38221-810	88, 90
C38231-810	88
C38331-810	88, 90
C38341-810	88
C38351-810	88
C38451-810	88
C38461-810	88

D

DD6M	76, 80, 86, 87, 88

E

E212LM	91
E252LM	91
E312LM	91
EE3G	76, 78, 80, 86, 87, 88
EE53G	76, 79, 80, 86, 87, 88
EE59G	76, 79, 80, 86, 87, 88
EE5M	76, 77, 80, 86, 87, 88
EE9G	76, 79, 80, 86, 87, 88
EEM	76, 77, 80, 86, 87, 88

Index

Model Number — Page

F

F35-0B-C28 . . . 86
F35111-420 . . . 90
F35121-420 . . . 86, 90
F35221-410 . . . 86, 90
F35231-410 . . . 86
F35331-410 . . . 86, 90
F35341-410 . . . 86
F35351-410 . . . 86

F35451-410 . . . 86
F35461-410 . . . 86
F42-0A-000 . . . 86

V

HH5M . . . 76, 78, 80, 86, 87, 88
HHM . . . 76, 77, 80, 86, 87, 88

K

K214LM . . . 91
K314LS . . . 91
K5B - Foot . . . 85
K5B - Manual . . . 85
K5B - NEMA - 213 . . . 85
K5B - Pilot . . . 85
K5B - Shaft - 1.625 . . . 85
KK5B546 . . . 83, 84, 85, 86, 87, 88
KK5B550 . . . 83, 84, 85, 86, 87, 88
KK6M . . . 76, 78, 80, 86, 87, 88

L

L36111-120 . . . 90
L36121-120 . . . 90
L36221-110 . . . 90
L36231-110 . . . 90
L36331-110 . . . 90
L36341-110 . . . 87
L36351-110 . . . 87
L36451-110 . . . 87
L36461-110 . . . 87
L40-0A-000 . . . 87
L40-0B-000 . . . 87

M

M002RHR006AR3 . . . 9, 10
M002RHR008AR3 . . . 9, 10
M002RHR013AR3 . . . 9, 10
M002RHR021AR3 . . . 9, 10
M002RHR028AR3 . . . 9, 10
M002RHR044AR3 . . . 9, 10
M002RHR101AR3 . . . 9, 10
M002RHR159AR3 . . . 9, 10
M002RVR000AR3 . . . 9, 10
M002RVR004AR3 . . . 9, 10

Model Number — Page

M002RVR006AR3 . . . 9, 10
M002RVR008AR3 . . . 9, 10
M002RVR013AR3 . . . 9, 10
M002RVR021AR3 . . . 9, 10
M002RVR028AR3 . . . 9, 10
M002RVR044AR3 . . . 9, 10
M002RVR101AR3 . . . 9, 10
M002RVR159AR3 . . . 10
M004RHR000AR3 . . . 15
M004RHR004AR3 . . . 15
M004RHR006AR3 . . . 15
M004RHR011AR3 . . . 15
M004RHR015AR3 . . . 15
M004RHR023AR3 . . . 15
M004RHR033AR3 . . . 15
M004RHR050AR3 . . . 15
M004RHR083AR3 . . . 15
M004RHR167AR3 . . . 15
M004RVR000AR3 . . . 15
M004RVR004AR3 . . . 15
M004RVR006AR3 . . . 15
M004RVR011AR3 . . . 15
M004RVR015AR3 . . . 15
M004RVR023AR3 . . . 15
M004RVR033AR3 . . . 15
M004RVR050AR3 . . . 15
M004RVR083AR3 . . . 15
M004RVR167AR3 . . . 15
M007RHR000AR4 . . . 24
M007RHR004AR4 . . . 24
M007RHR006AR4 . . . 24
M007RHR009AR4 . . . 24
M007RHR012AR4 . . . 24
M007RHR015AR4 . . . 24
M007RHR021AR4 . . . 24
M007RHR027AR4 . . . 24
M007RHR037AR4 . . . 24
M007RHR044AR4 . . . 24
M007RHR063BR6 . . . 24
M007RHR086BR6 . . . 24
M007RHR119BR6 . . . 24
M007RHR151BR6 . . . 24
M007RHR188BR6 . . . 24
M007RHR275BR6 . . . 24
M007RHR374BR6 . . . 24
M007RVR000AR4 . . . 24
M007RVR004AR4 . . . 24
M007RVR006AR4 . . . 24
M007RVR009AR4 . . . 24
M007RVR012AR4 . . . 24
M007RVR015AR4 . . . 24
M007RVR021AR4 . . . 24
M007RVR027AR4 . . . 24
M007RVR037AR4 . . . 24
M007RVR044AR4 . . . 24
M007RVR063BR6 . . . 24
M007RVR086BR6 . . . 24
M007RVR119BR6 . . . 24
M007RVR151BR6 . . . 24

Ingersoll Rand

Index

Model Number	Page
M007RVR188BR6	24
M007RVR275BR6	24
M007RVR374BR6	24
M512LR	91
M513LR	91
M514LR	91
MLK-K269C	84, 85
MOV010AA-674	54
MOV075AA	52, 54
MVA017A	52, 54
MVA017B	52, 54
MVA034A	52, 54
MVA034B	52, 54
R	
R1440-212-1	12, 17
R1801-A123	36, 91
R37111-600	90
R37121-600	86, 90
R37221-600	86, 90
R37231-600	86, 90
R37331-600	86, 90
R37341-600	86
R37351-600	86
R37451-600	86
R37461-600	86
R30-0A-G00	86
R30-0A-G01	86
R40-0B-G00	86
S	
Series 17RA, 17RB, 34RA, 34RB	43, 44, 45, 86, 87, 88
Series 1801 and 1841	35, 36
Series 3800 and 3840	37, 38
Series 4800 and 4840	41
Series 48RA and 48RB	46, 47
Series 551	75
Series 92RA and 92RB	48, 49
Series 92RM and 992RM	50, 51
Series M002	9, 10, 11, 12
Series M004	5, 15, 16, 17
Series M007	24, 25, 26, 27, 28
Series MVA	52, 53
SM1AM	55, 56, 57, 86, 87, 88
SM1AMA	55, 56
SM1AM-AG587	55, 56, 57
SM1UP	55, 57, 86, 87, 88
SM1UPC	55, 56
SM2AM	56, 58, 86, 87, 88
SM2AM-AH636	55, 56, 58
SM2AMAN	54, 56, 58
SM2AMC	54, 56, 58

Model Number	Page
SM4AM	55, 59, 86, 87, 88, 90
SM4AM-AH634	55, 56, 59
SM4AMAN	55, 56, 59
SM4AMB	55, 56, 59
SM6AM	55, 56, 60, 86, 87, 89
SM6AMA	55, 56, 60
SM6AMAN	55, 56, 60
SM8AM	56
SM8AMA	55, 56, 61
SM8AM-AH640	55, 56, 61
SM8AMAN	55, 56, 61
SRA010A1-A212	91
SS350-A674	91
SS800-A674	91
ST500-674	91
U	
UWD - A686	84, 85

NOTES

NOTES

United States
Ingersoll Rand
Tel: +1-800-TOOLHLP
Fax: +1-615-672-7678

Canada
Ingersoll Rand Canada
Tel: +1-800-TOOLHLP
Fax: +1-416-213-4510

Mexico
Ingersoll Rand S.A. de C.V.
Tel: +52 55 5005-6600
Fax: +52 55 5565-3072

Chile
Ingersoll Rand Chile
Tel: +56 2 444-6800
Fax: +56 2 485-8303

Brazil
Ingersoll Rand do Brasil Ltda
Tel: +55 11 2109-8900
Fax: +55 11 2109-8998

UK and Ireland
Ingersoll Rand Sales Co. Ltd.
Tel: +44 1942 500030
Fax: +44 1942 503451

France
Ingersoll Rand
Tel: +33 1 78 71 10 99
Fax: +33 1 78 71 10 90

Spain and Portugal
Ingersoll Rand Iberica
Tel: +34 91 6277405
Fax: +34 91 6277406

Italy
Ingersoll Rand Italiana Spa
Tel: +39 (0) 2 950561
Fax: +39 (0) 2 95360159

Germany, Austria, and Switzerland
Ingersoll Rand GmbH
Tel: +49 208 999 4422
Fax: +49 208 999 4444

Scandinavia
Ingersoll Rand
Tel: +47 2255 1526
Fax: +47 2243 6581

Russia and CIS
Ingersoll Rand
Tel: +7 495 933 03 24
Fax: +7 495 785 21 26

Czech Republic and Slovakia
Ingersoll Rand
Tel: +420 2 57 109 756
Fax: +420 2 57 109 758

Belgium, Netherlands, and Luxembourg
Ingersoll Rand
Tel: +33 8 10 22 27 77
Fax: +33 1 30 07 69 80

Greece
Ingersoll Rand
Tel: +33 1 30 07 69 60
Fax: +33 1 30 07 69 80

Poland
Ingersoll Rand
Tel: +48 22 635 72 45
Fax: +48 22 635 73 32

Hungary, Slovenia, and Croatia
Ingersoll Rand
Tel: +36 28 512 800
Fax: +44 1942 520319

Bulgaria, Romania, and Serbia and Montenegro
Ingersoll Rand
Tel: +359 2 961 79 65
Fax: +359 2 961 79 69

Estonia, Latvia, and Lithuania
Ingersoll Rand
Tel: +372 653 0110
Fax: +372 653 0112

Sub-Saharan Africa
Ingersoll Rand
Tel: +27 11 864 3930
Fax: +27 11 864 3954

Middle East and Northern Africa
Ingersoll Rand
Tel: +971 (0) 43313984
Fax: +971 (0) 43313032

Korea
Ingersoll Rand Korea
Tel: +82-2-3660-6800
Fax: +82-2-3141-8010

Singapore
Ingersoll Rand South East Asia (Pte) Ltd.
Tel: +65-6860-6726
Fax: +65-6862-1373

China
Shanghai Service Center
Tel: +86-21-5691-1778
Fax: +86-21-5691-1779

Australia
Ingersoll Rand (Australia) Ltd.
Tel: +61-3-9212-5800
Fax: +61-3-8787-5510

Malaysia
Ingersoll Rand Malaysia Co. Sdn.Bhd.
Tel: +60-3-5633-3322
Fax: +60-3-5634-5911

Japan
Ingersoll Rand Japan, Ltd.
Tel: +81-3-5420-3392
Fax: +81-3-5420-9116

India
Ingersoll Rand Wadco Tools Pvt. Limited
Tel: +91-120-4389200
Fax: +91-120-4389444

India
PT Ingersoll-Rand Indonesia
Tel: +62 21 2940 6890
Fax: +62 21 2940 6892

Thailand
Gardner Denver (Thailand) Co., Ltd.
Tel : +66-2396-1134 to 36 ext.0
Fax:+66 23961138

Philippines
Ingersoll-Rand Philippines, Inc.
Tel : +63-882263019
Fax : Not available

Philippines
Ingersoll-Rand Vietnam Co., Ltd
Tel: +84 28 39977428
Fax : Not available

www.ingersollrand.com

Ingersoll Rand (NYSE:IR), driven by an entrepreneurial spirit and ownership mindset, is dedicated to helping make life better for our employees, customers and communities. Customers lean on us for our technology-driven excellence in mission-critical flow creation and industrial solutions across 40+ respected brands where our products and services excel in the most complex and harsh conditions. Our employees develop customers for life through their daily commitment to expertise, productivity and efficiency.

©2022 Ingersoll Rand
PTL_019_07_2021_AirMotors