Ingersoll Rand



CONSTRUCTION TOOLS

INGERSOLL RAND® . . .
ON THE JOB SINCE 1871

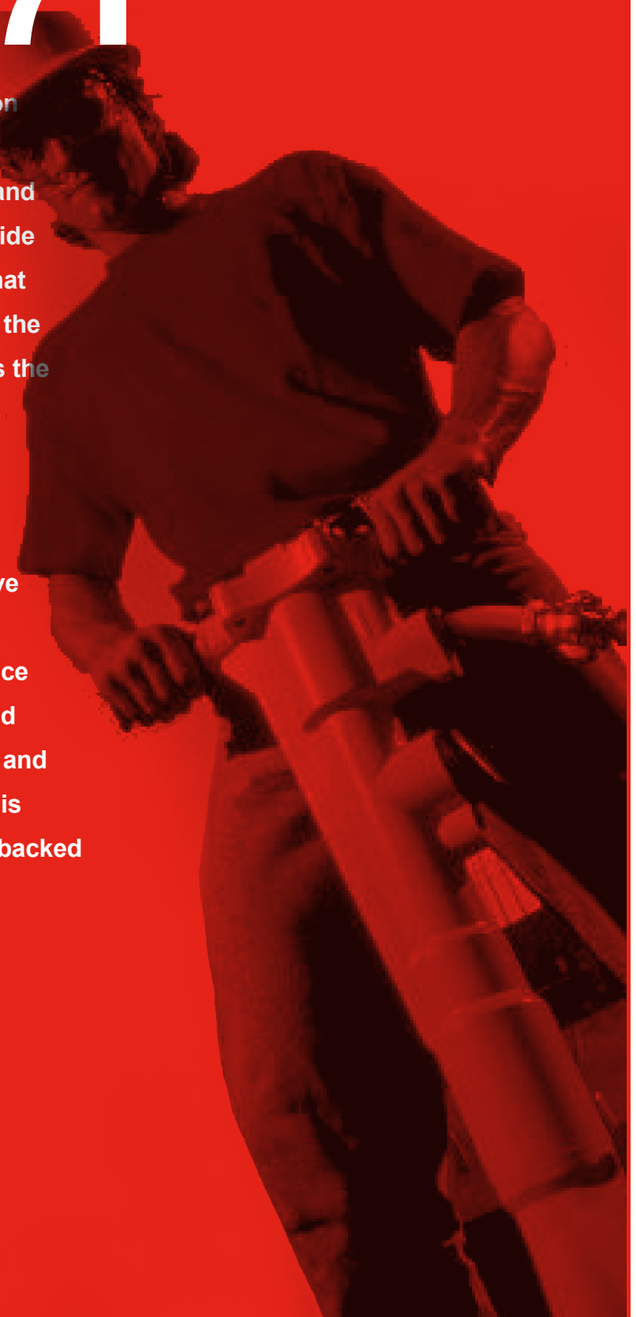

Ingersoll Rand® has a unique heritage in construction that dates back to the company's founding in 1871. Simon Ingersoll invented the world's first rock drill and revolutionized productivity on the jobsite with the wide array of compressors, tools, and related products that came later. He built a business and an industry with the power and tools that helped create such wonders as the Hoover Dam and Mt. Rushmore.

Today, Ingersoll Rand offers one of the most comprehensive lines of construction tools on the market, as well as portable air compressors that have become industry standards. As a full-line tool and equipment provider, Ingersoll Rand also offers service and maintenance tools such as impact wrenches and surface preparation tools, as well as pullers, hoists, and winches for material handling tasks. Ingersoll Rand is breaking new ground with solutions for the jobsite, backed by a solid history, proven performance, and strong customer support.

CONSTRUCTION TOOLS



PAVEMENT BREAKERS	5
SPIKE DRIVERS	7
DIGGERS	7
PAVEMENT BREAKER AND DIGGER STEELS	8
JACKHAMMERS AND ROCKDRILLS	9
STEELS, BITS, AND RETAINERS	9
RIVET BUSTERS	10
RIVET BUSTERS, STEELS AND RETAINERS	10
CHIPPING HAMMERS	11
CHIPPING HAMMER STEELS AND RETAINERS	13
BACKFILL TAMPERS AND SAND RAMMERS	14

Ingersoll Rand

ERGONOMICALLY DESIGNED handles, grips, throttle lever, and breaker housing provide maximum operator comfort and productivity

FOUR-BOLT BACKHEAD contoured to fit the operator's leg; easily removed for routine maintenace

INTERNAL LUBRICATOR for continuous tool protection

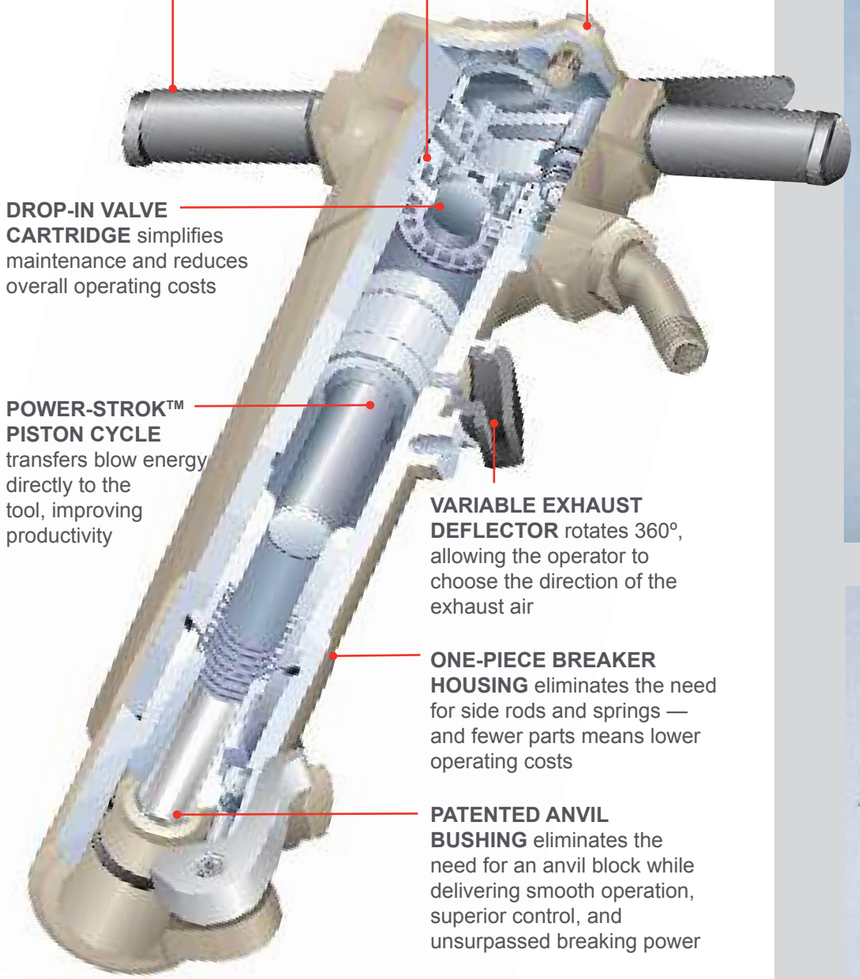

DROP-IN VALVE CARTRIDGE simplifies maintenance and reduces overall operating costs

POWER-STROK™ PISTON CYCLE transfers blow energy directly to the tool, improving productivity

VARIABLE EXHAUST DEFLECTOR rotates 360º, allowing the operator to choose the direction of the exhaust air

ONE-PIECE BREAKER HOUSING eliminates the need for side rods and springs — and fewer parts means lower operating costs

PATENTED ANVIL BUSHING eliminates the need for an anvil block while delivering smooth operation, superior control, and unsurpassed breaking power

30% FEWER PARTS

INGERSOLL RAND BREAKER



COMPETITIVE RAND BREAKER



PAVEMENT BREAKERS

PB Series

- One-piece housing eliminates costly side rods and springs
- Power-stroke piston delivers more energy to the work surface and eliminates another costly wear item
- Built-in lubricator helps ensure adequate lubrication
- Two roll pins and removal of the housing plug on the top head make service access simple
- Muffler reduces noise (PB35AS8 and PB50AS1 only)

PB35AL8



PB35AS8



PB50AL1



PB50AS1



Model	Hex Shrink Size	Stroke in (mm)	Bore in (mm)	Length Without Accessory in (mm)	Weight Without Accessory lb (kg)	bpm	cfm	Inlet Size NPT in	Recommended Hose Size in (mm)
PAVING BREAKERS WITH MUFFLER									
PB35AS8	1" x 4-1⁄4"	6.25" (159)	1.75" (44)	25" (625)	43 (20)	1,250	49	3/4"	3/4" (19)
PB50AS1	1-1⁄8" x 6"	6.25" (159)	1.75" (44)	27.5" (699)	55 (25)	1,150	58	3/4"	3/4" (19)
PAVING BREAKERS WITHOUT MUFFLER									
PB35AL8	1" x 4-1/4"	6.25" (159)	1.75" (44)	25" (625)	40 (18)	1,250	49	3/4"	3/4" (19)
PB50AL1	1-1/8" x 6"	6.25" (159)	1.75" (44)	27.5" (699)	52 (24)	1,150	58	3/4"	3/4" (19)

Performance figures are at 90 psi (6.2 bar) air pressure.

MX Series

- No expensive side rods and springs
- Composite valve won't rust
- Directional exhaust eliminates blow back
- Built-in lubricator
- Hand-serviceable shank doesn't require a press to service
- Backhead conforms to operator's leg
- Optional muffler sold separately (MX90 Series only)

MX60A



MX90A



MX Series with Flex-Handle™

The Flex-Handle feature provides vibration dampening in a full 360° range of movement. Competitive mechanical springs only work in one direction and lose their ability to absorb vibration when fully compressed, or when hammering while pulling the breaker out of the work surface.

MX60AF



MX90AF



Model	Hex Shrink Size	Stroke in (mm)	Bore in (mm)	Length Without Accessory in (mm)	Weight Without Accessory lb (kg)	bpm	cfm	Inlet Size NPT in	Recommended Hose Size in (mm)	Muffler Part Number
STANDARD BREAKERS										
MX60A	1-1⁄8" x 6"	5.75" (146)	2.06" (52.3)	27.5" (686)	76 (31.8)	1,250	70	3/4"	3/4" (19)	N/A
MX60B	1-1⁄4" x 6"	5.75" (146)	2.06" (52.3)	27.5" (686)	76 (31.8)	1,250	70	3/4"	3/4" (19)	N/A
MX90A	1-1⁄8" x 6"	5.75" (146)	2.62" (66.5)	27.5" (686)	87 (39.5)	1,250	85	3/4"	3/4" (19)	51953453
MX90B	1-1⁄4" x 6"	5.75" (146)	2.62" (66.5)	27.5" (686)	87 (39.5)	1,250	85	3/4"	3/4" (19)	51953453
VIBRATION-REDUCED FLEX-HANDLE BREAKERS										
MX60AF	1-1⁄8" x 6"	5.75" (146)	2.06" (52.3)	27.5" (686)	76 (31.8)	1,250	70	3/4"	3/4" (19)	N/A
MX60BF	1-1⁄4" x 6"	5.75" (146)	2.06" (52.3)	27.5" (686)	76 (31.8)	1,250	70	3/4"	3/4" (19)	N/A
MX90AF	1-1⁄8" x 6"	5.75" (146)	2.62" (66.5)	27.5" (686)	87 (39.5)	1,250	85	3/4"	3/4" (19)	51953453
MX90BF	1-1⁄4" x 6"	5.75" (146)	2.62" (66.5)	27.5" (686)	87 (39.5)	1,250	85	3/4"	3/4" (19)	51953453

Performance figures are at 90 psi (6.2 bar) air pressure.

Spike Drivers

- Built-in lubricator
- No side rods or springs to wear
- Composite valve eliminates rust
- Power-stroke piston
- The fronthead guides and supports spike

MX60-SD

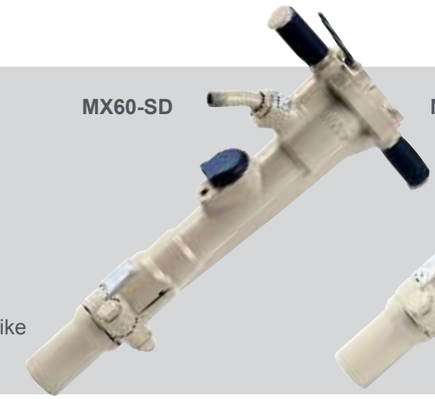

MX90-SD



Model	Stroke in (mm)	Bore in (mm)	Length Without Accessory in (mm)	Weight Without Accessory lb (kg)	bpm	cfm	Inlet Size NPT in	Recommended Hose Size in (mm)
FIXED-SPIKE DRIVERS								
MX60-SD	5.75" (146)	2.06" (52.3)	27.5" (686)	69 (31.4)	1,250	70	3/4"	3/4" (19)
MX90-SD	5.75" (146)	2.62" (66.5)	27.5" (686)	86 (39)	1,250	85	3/4"	3/4" (19)
VIBRATION-REDUCED FLEX-HANDLE MODELS								
MX60F-SD	5.75" (146)	2.06" (52.3)	27.5" (686)	69 (31.4)	1,250	70	3/4"	3/4" (19)
MX90F-SD	5.75" (146)	2.62" (66.5)	27.5" (686)	86 (39)	1,250	85	3/4"	3/4" (19)

Performance figures are at 90 psi (6.2 bar) air pressure.

Diggers

- Multiple retainer configurations
- D-handle grip
- Extra long nozzles for long life
- Three-finger inside trigger

93LA1



95LA1



Model	Retainer Type	Hex Shrink Size	Stroke in (mm)	Bore in (mm)	Length Without Accessory in (mm)	Weight Without Accessory lb (kg)	bpm	cfm	Inlet Size NPT in	Recommended Hose Size in (mm)
93 SERIES LIGHTWEIGHT DIGGERS										
93A1	Sleeve	7/8" x 3-1/4"	2.5" (64)	1.69" (43)	18.88" (479)	22 (10)	2,350	45	3/8"	1/2" (13)
93A4	Hitch	7/8" x 3-1/4"	2.5" (64)	1.69" (43)	17.88" (454)	21 (9.5)	2,350	45	3/8"	1/2" (13)
93LA1	Latch	7/8" x 3-1/4"	2.5" (64)	1.69" (43)	18.88" (479)	23 (10.4)	2,350	45	3/8"	1/2" (13)
95 SERIES MEDIUM-WEIGHT DIGGERS										
95A1	Sleeve	7/8" x 3-1/4"	4" (102)	1.69" (43)	21.88" (556)	27 (12.3)	1,850	47	3/8"	1/2" (13)
95LA1	Latch	7/8" x 3-1/4"	4" (102)	1.69" (43)	21.88" (556)	28 (12.7)	1,850	47	3/8"	1/2" (13)
95LA3	Latch	1" x 4-1/4"	4" (102)	1.69" (43)	21.88" (556)	30 (13.6)	1,850	47	3/8"	1/2" (13)

Performance figures are at 90 psi (6.2 bar) air pressure.

Pavement Breaker and Digger Steels

Product	Steel Description	Under Collar Length	Tool*	Hex Shank Size and Part Number 7/8" x 3-1/4	7/8" x 3-1/4	1-1/8" x 6"	1-1/4"x6"
	Moil Points — Standard-duty Used for general demolition	14" 18" 24" 36" 48" 60" 72"	PB/D	50050269 50050285 51305860 45512621 45512639 45512647	50050368 50050392 45512563 45512571 45512597	50050475 50055524 50055540 50055565 50055573 50055581 50055599	50055680 50055698 50055714 50055730 50055748 50055755 50198993
	Moil Points — Super-duty	11-1/4" 14-1/4"	PB/D		22041057 22041065	22041073	22041099
	1" Narrow Chisels — Standard-duty Used for general demolition	14" 18" 24" 36" 48" 60" 72"	PB/D	50199207 50199215 45510682 45510690 45510708 45510716	50197805 50197821 45510245 45510252 45510260 45510278	50197904 50197912 50197938 51298107 50197979 50197987	50196385 50196401 50196419 51299477 51299485
	1" Narrow Chisels — Super-duty	11-1/4" 14-1/4"	PB/D	22041503 22041610	22041123		22041156 22041164
	3" Chisels Used for concrete demolition and asphalt cutting	14" 18" 24" 36" 48" 60" 72"	PB	50195288 50195296 45510542 45510559 45510583	50195320 50195338 50195353 50195361 50195379 51304574	50114883 50193754 50193747 45510500 45510518 45510526 45510534	50193879 50193887 50193903
	3-3/4" Combo Cutter Used for manhole reconstruction	11-1/2"	PB	N/A	N/A	22040612	
	5" Asphalt Cutter Used for asphalt cutting and removal	11"	PB	22040935	50190404	50185982	50185990
	5-1/2" Clay Spade Used for trench digging and trimming	11"	D	50189596		50189562	50189570
	Ground Rod Driver Used for driving steel rod with up to 1" OD	8"	PB	N/A	N/A	22040588	22040596
	Detachable Shank To be used with tent stake drivers or tamping pad	7-3/4"	PB/D	22040927	50187830	50187848	
	3-piece Sign Post Driver Includes shank, post block, and 3-1/2" IO driver	7-3/4"	PB/D	22040778	22040943	22041008	

Super-duty moil points and chisels are rounded under the collar and have more mass and strength for longer life and less sharpening.
*PB = Pavement Breaker D= Digger

Jackhammers and Rockdrills

- Easy-access adjustable 3-speed throttle
- Reversible pawls
- Integral muffler
- For wet or dry drilling



JRD30-A JH40C2 JRD50

Model	Hex Shrink Size	Stroke in (mm)	Bore in (mm)	Length Without Accessory in (mm)	Weight Without Accessory lb (kg)	Max Hole Diameter	Max Hole Depth	bpm	cfm	Inlet Size NPT in	Recommended Hose Size in (mm)
JRD30-A	7⁄8" x 3-1⁄4"	1.44" (37)	2.38" (60)	19.5" (495)	29 (13.2)	1.5" (38)	10' (254)	2,700	73	3/4"	3/4" (19)
JRD30-B	7⁄8" x 4-1⁄4"	1.44" (37)	2.38" (60)	19.5" (495)	29 (13.2)	1.5" (38)	10' (254)	2,700	73	3/4"	3/4" (19)
JH40C1	7⁄8" x 3-1⁄4"	2.63" (67)	2.5" (63.5)	22.5" (572)	61 (27.7)	2" (51)	18' (457)	2,000	115	3/4"	3/4" (19)
JH40C2	7⁄8" x 4-1⁄4"	2.63" (67)	2.5" (63.5)	22.5" (572)	61 (27.7)	2" (51)	18' (457)	2,000	115	3/4"	3/4" (19)
JH40C3	1" x 4-1⁄4"	2.63" (67)	2.5" (63.5)	22.5" (572)	61 (27.7)	2" (51)	16' (406)	2,000	115	3/4"	3/4" (19)
JRD50-A	7/8" x 3-1/4"	2" (51)	3" (76)	20.5" (521)	51 (23)	2" (51)	16' (406)	2,300	120	3/4"	3/4" (19)
JRD50-B	7/8" x 4-1/4"	2" (51)	3" (76)	20.5" (521)	51 (23)	2" (51)	16' (406)	2,300	120	3/4"	3/4" (19)
JRD50-C	1" x 4-1/4"	2" (51)	3" (76)	20.5" (521)	51 (23)	2" (51)	16' (406)	2,300	120	3/4"	3/4" (19)

Steels, Bits, and Retainers

Product	Description	Under Collar Length in	Hex Shank Part Number and Size 7/8" x 3-1/4"	7/8" x 4-1/4"	1" x 4-1/4"
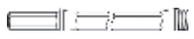	"H" Thread Jack Rods	18"		51242014	50713031
		24"	50283506	51233690	50354596
		36"		51234052	50713049
		48"	50283555	51234060	50283183
		60"		51242063	

Product	Description	Bit Size in (mm)	Part Number Single-use	Multi-use
	"H" Thread Carbide Bits	1-1/2" (38)	51248367	51248300
		1-3/4" (44)		51248326
		2" (52)		51248342
		2-1/4" (57)	N/A	51356723
		2-1/2"(64)	N/A	51293017

Product	Description	Bit Diameter	Depth in	Length in	Part Number 7/8" x 3-1/4"
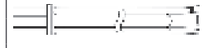	Carbide-tipped Drill Steel	5/8"	15"	18"	WB581518
		5/8"	21"	24"	WB582124
		3/4"	15"	18"	WB341518
		3/4"	21"	24"	WB342124
		7/8"	15"	18"	WB781518
		7/8"	21"	24"	WB782124
		1-1/8"	15"	18"	WB1181518

A full line of carbide-tipped drill steels and 1-1/4" x 4-1/4" hex shank rope thread jackrod is available from the Ingersoll Rand Construction Tool Steels and Accessories catalog, along with other sizes of jackrod and bits: Form # IRPS-0407-006.

Rivet Busters

- Piston bridge prevents accidental discharge for increased safety
- Steel throttle valve
- Case-hardened alloy steel cylinder
- Heavy-duty upper and lower sleeves
- Takes industry standard jumbo steel
- Directional exhaust (9001 and 11001 models only)



Model	Barrel Type	Stroke in (mm)	Bore in (mm)	Length Without Accessory in (mm)	Weight Without Accessory lb (kg)	bpm	cfm	Inlet Size NPT in	Recommended Hose Size in (mm)
8001A	Grooved barrel with lock spring	8” (203)	1.19” (30)	22.5” (572)	30 (13.6)	1,140	44	1/2”	3/4” (19)
9001A	Grooved barrel with lock spring	9” (229)	1.06” (27)	22.5” (572)	24.75 (11.2)	900	40	1/2”	3/4” (19)
9001	Threaded barrel with lock clip	9” (229)	1.06” (27)	22.5” (572)	24.75 (11.2)	900	40	1/2”	3/4” (19)
11001A	Grooved barrel with lock spring	11” (279)	1.06” (27)	24.5” (622)	30.21 (13.7)	800	45	1/2”	3/4” (19)
11001	Threaded barrel with lock clip	11“ (279)	1.06” (27)	24.5” (622)	30.21 (13.7)	800	45	1/2”	3/4” (19)

Performance figures are at 90 psi (6.2 bar) air pressure.

Rivet Buster Steels and Retainers

Product	Description	Length in (mm)	Part Number
	Moil Point	9” (229)	9001-297-9
		12” (305)	9001-297-12
	Chisels	9-1/2” (241)	9001-276-9-1/2
		12” (305)	9001-276-12
		18” (457)	9001-276-18
	Side-cut Chisel	9-1/2” (241)	9001-277-9-1/2
		12” (305)	9001-277-12
	Ripper Chisel	9-1/2” (241)	9001-295 9-1/2
		12” (305)	9001-295-12

Product	Description	Threaded Barrel 9001, 11001	Grooved Barrel 8001A, 9001A, 11001A
	Retainer	N/A	89938443
	Retainer	9001-200	N/A
	Upper Sleeve	9001-220	9001-220
	Lower Sleeve	9001-201	9001-201

Product	Description	Threaded Barrel 9001, 11001	Grooved Barrel 8001A, 9001A, 11001A
	Bumper	9001-203	9001-203
	Lock Clip	9RB-207	N/A
	Spring Lock	N/A	89938450
	Key	9001-208	N/A
	Pin	FMD2-667	N/A

Chipping Hammers

K Series

- General / light-duty
- Grooved barrel with lock-spring retainer
- Swan-neck handle with outside trigger
- Replaceable piston
- Uses oval collar accessories


K2LA1

D Series

- Construction-duty
- Die-cast aluminum handle with outside trigger
- Directional exhaust
- Available in 2”, 3”, or 4” stroke
- Tease throttle
- Uses oval collar accessories


2DA2SA

Model	Retainer Type	Stroke in (mm)	Bore in (mm)	Length Without Accessory in (mm)	Weight Without Accessory lb (kg)	bpm	cfm	Inlet Size NPT in	Recommended Hose Size in (mm)
D SERIES CONSTRUCTION-DUTY CHIPPERS WITH .580” HEX NOZZLE — FOR USE WITH HEX SHANK OVAL COLLAR ACCESSORIES									
2DA1SA	Standard	2” (51)	1.13” (29)	13.75” (349)	13.75 (6.25)	2,200	28	7/8”-24	1” (25)
3DA1SA	Standard	3” (76)	1.13” (29)	17” (432)	15 (6.82)	1,900	31	7/8”-24	1” (25)
4DA1SA	Standard	4” (102)	1.13” (29)	18” (457)	16 (7.27)	1,600	34	7/8”-24	1” (25)
WITH .680” ROUND NOZZLE — FOR USE WITH ROUND SHANK OVAL COLLAR ACCESSORIES									
2DA2SA	Standard	2” (51)	1.13” (29)	13.75” (349)	13.75 (6.25)	2,200	28	7/8”-24	1” (25)
3DA2SA	Standard	3” (76)	1.13” (29)	17” (432)	15 (6.82)	1,900	31	7/8”-24	1” (25)
4DA2SA	Standard	4” (102)	1.13” (29)	18” (457)	16 (7.27)	1,600	34	7/8”-24	1” (25)

Performance figures are at 90 psi (6.2 bar) air pressure.

Chipping Hammers

A Series

- Industrial-duty
- Grooved barrel with lock-spring retainer
- Swan-neck handle with outside trigger
- Replaceable piston
- Uses oval collar accessories



2A2SA

W Series

- Heavy-duty
- Swan-neck handle with outside trigger
- Heavy-duty threaded barrel
- Rubber buffered screw on retainer
- Uses round collar accessories



W3A2

Model	Retainer Type	Stroke in (mm)	Bore in (mm)	Length Without Accessory in (mm)	Weight Without Accessory lb (kg)	bpm	cfm	Inlet Size NPT in	Recommended Hose Size in (mm)
A SERIES INDUSTRIAL-DUTY CHIPPERS									
WITH .580" HEX NOZZLE — FOR USE WITH (X4) HEX SHANK OVAL COLLAR ACCESSORIES									
1A1SA	Standard	1" (25)	1.13" (28)	15.5" (394)	14.75 (6.69)	2,500	28	3/8"	1/2" (13)
2A1SA	Standard	2" (51)	1.13" (28)	16" (406)	15.13 (6.86)	2,300	28	3/8"	1/2" (13)
3A1SA	Standard	3" (76)	1.13" (28)	17.88" (454)	16.63 (7.54)	1,725	29	3/8"	1/2" (13)
4A1SA	Standard	4" (102)	1.13" (28)	18.88" (480)	17.5 (7.94)	1,480	29	3/8"	1/2" (13)
WITH .680" ROUND NOZZLE — FOR USE WITH (X4) ROUND SHANK OVAL COLLAR ACCESSORIES									
1A2SA	Standard	1" (25)	1.13" (28)	15.5" (394)	14.75 (6.69)	2,500	28	3/8"	1/2" (13)
2A2SA	Standard	2" (51)	1.13" (28)	16" (406)	15.13 (6.86)	2,300	28	3/8"	1/2" (13)
3A2SA	Standard	3" (76)	1.13" (28)	17.88" (454)	16.63 (7.54)	1,725	29	3/8"	1/2" (13)
4A2SA	Standard	4" (102)	1.13" (28)	18.88" (480)	17.5 (7.94)	1,480	29	3/8"	1/2" (13)
W SERIES HEAVY-DUTY CHIPPERS									
WITH .580" HEX NOZZLE — FOR USE WITH (X4) HEX SHANK ROUND COLLAR ACCESSORIES									
W1A1	Rubber-buffered	1" (25)	1.13" (28)	15.88" (403)	14.75 (6.69)	2,500	28	3/8"	1/2" (13)
W2A1	Rubber-buffered	2" (51)	1.13" (28)	16.38" (416)	15.13 (6.86)	2,300	28	3/8"	1/2" (13)
W3A1	Rubber-buffered	3" (76)	1.13" (28)	18.25" (464)	16.63 (7.54)	1,725	29	3/8"	1/2" (13)
W4A1	Rubber-buffered	4" (102)	1.13" (28)	19.25" (489)	17.5 (7.94)	1,480	29	3/8"	1/2" (13)
WITH .680" ROUND NOZZLE — FOR USE WITH (X4) ROUND SHANK ROUND COLLAR ACCESSORIES									
W1A2	Rubber-buffered	1" (25)	1.13" (28)	15.88" (403)	14.75 (6.69)	2,500	28	3/8"	1/2" (13)
W2A2	Rubber-buffered	2" (51)	1.13" (28)	16.38" (416)	15.13 (6.86)	2,300	28	3/8"	1/2" (13)
W3A2	Rubber-buffered	3" (76)	1.13" (28)	18.25" (464)	16.63 (7.54)	1,725	29	3/8"	1/2" (13)
W4A2	Rubber-buffered	4" (102)	1.13" (28)	19.25" (489)	17.5 (7.94)	1,480	29	3/8"	1/2" (13)

Performance figures are at 90 psi (6.2 bar) air pressure.

Chipping Hammer Steels and Retainers

Product	Description	Under Collar Length in	K, A, and D Series		W Series	
			0.68 Round Shank Oval Collar	0.58 Hex Shank Oval Collar	0.68 Round Shank Round collar	0.58 Round Shank Round collar
	1" Flat Chisel	9"	HH1-215F-9	HH1-214F-9	H3R-215F-9	H3R-214F-9
		12"	HH1-215F-12	HH1-214F-12	H3R-215F-12	H3R-214F-12
		18"	HH1-215F-18	HH1-214F-18	H3R-215F-18	H3R-214F-18
	Moil Point	9"	HH1-215M-9	HH1-214M-9	H3R-215M-9	H3R-214M-9
		12"	HH1-215M-12	HH1-214M-12	H3R-215M-12	H3R-214M-12
		18"	HH1-215M-18	HH1-214M-18	H3R-215M-18	H3R-214M-18
	2" Scaling Chisel	9"	HH1-323-9	HH1-324-9	HH1-423-9	H3R-214M-18
		12"	HH1-323-12	HH1-324-12	H3R-423-12	H3R-424-12
	Diamond Point	12"	HH1-215D-12	HH1-214D-12	H3R-215D-12	H3R-214D-12
	Bushing Tool	9"	HH1-215T-9	HH1-214T-9	H3R-215T-9	H3R-214T-9

Other steels available from Ingersoll Rand Construction Tool Steels and Accessories Catalog, Form # IRPS-0407-006 including spark-resistant chisels, blanks, capes, gouges, round noses, fullers, caulking, ripper chisels, tooth chisels, and paper box stripping chisels.

Product	Description	Barrel Type	K, A, and D Series	W Series
	Standard Standard on all chippers ending in SA	Grooved	HH1-1190	N/A
	Optional Quick Change	Grooved	HH1-1191	N/A
	Optional Quick Change	Grooved	HH1-3400-3	N/A
	Lock Spring Used on all grooved barrel retainers	Grooved	HH1-1194	N/A
	Rubber-Buffered* Standard on all W Series chippers	Threaded	N/A	HHW1-A300
	Optional Economy Type	Threaded	N/A	HHW2-200
	Optional Quick Change	Threaded	N/A	HHW1-3450

*W Series chipper with rubber-buffered retainer, part number HHW1-A300, includes the parts below.

Product	Description	Part Number
	Upper Buffer Washer (2 pieces)	H3R-31
	Lower Buffer Washer (2 pieces)	HHW1-213
	Lower Buffer Washer Ring	R000A2-103
	Rubber Bumper	H3R-203
	Lock Clip	24SR-207

Backfill Tampers and Sand Rammers

Sand Rammers

- Time-tested valve design
- Round piston rod
- Dual-action sand wiper keeps dirt out of the barrel
- 2-1/2” butt standard on 130A1M; 3” butt standard on 241A1M

Backfill Tampers

- Built-in lubricator and muffler
- Dual-action sand wiper keeps dirt out of the barrel
- Plated piston
- 5-3/4” round malleable butt standard on both the 341A2M and 441A2



130A1M 241A1M 341A2M 441A2

Model	Type	Stroke in (mm)	Bore in (mm)	Length in in (mm)	Weight lb (kg)	bpm	cfm	Inlet Size NPT in	Recommended Hose Size in (mm)
SAND RAMMERS									
130A1M	Bench	2.5” (63)	1” (25)	21.5” (546)	11.56 (5.24)	870	14	1/4”	3/8” (10)
241A1M	Floor	4” (102)	1.31” (33)	52.75” (1340)	26.88 (12.2)	1,590	29	3/8”	1/2” (13)
BACKFILL TAMPERS									
341A2M	N/A	4” (102)	1.63” (41)	52.75” (1340)	34.88 (15.8)	1,550	29	3/8”	1/2” (13)
441A2	N/A	4” (102)	2” (51)	50.88” (1292)	47.13 (21.4)	1,750	36	3/8”	1/2” (13)

Performance figures are at 90 psi (6.2 bar) air pressure.

ACCESSORY OPTIONS

Description of Butt	Part Number
FOR MODEL 130A1M — 1/2” TAPERED ROD	
Malleable butt 2-1/2” (64 mm) diameter, standard	12SR-83
Rubber topping-off butt 3-29/32” (99 mm) diameter	14SR-83R-4
Rubber-tipped peen	14SR-93R
FOR MODEL 341A2M — 7/8” TAPERED ROD	
Steel butt 3” (76 mm) diameter	34SR-383

Description of Butt	Part Number
FOR MODEL 241A1M — 5/8” TAPERED ROD	
Malleable butt 3” (76 mm) diameter, standard	22SR-83-3x3/4
Rubber-tipped butt 3” (76 mm) diameter	24SR-83R-3
Rubber-tipped butt 5” (127 mm) diameterdiameter	24SR-83R-5
Half-moon butt 5-1/4” (133 mm) diameter HM183-5	44SR-HM183-5

Air Line Accessories



HOSES

Part Number	Hose ID in	Length ft	Rated psi
DOUBLE-BANDED UNIVERSAL — BOTH SIDES			
22040679	3/4”	50’	300
DOUBLE-BANDED UNIVERSAL — 3/8” NPT SRAIGHT MALE			
22040687	1/2”	8’	250
DOUBLE-BANDED UNIVERSAL — 1/2” NPT SRAIGHT MALE			
22041453	1/2”	8’	250
DOUBLE-RANDED UNIVERSAL — 1/2” NPT SWIVEL MALE			
22041479	1/2”	8’	250



SWIVEL INLETS

Part Number	Description	Duty Type
HH1-VSW7/8	7/8” x 24” NPT x 1/2” hose barb	Heavy-duty
HH1-VSW1/2	1/2” NPT x 1/2” hose barb	Heavy-duty



OILERS

Oil Capacity	3 oz	5 oz	8 oz	16 oz
NPT Pipe Size	1/2”	3/4”	3/4”	1”
Part Number	3LUB8	6LUB12	8LUB12	16LUB16

COUPLERS

Hose / Pipe Threa in	Universal To Female	Universal To Hose Barb	Universal To Male	OSHA Shut-off Valve	Universal 3-way	Universal Coupler Gasket
3/8”	N/A	N/A	UM-37-M	N/A	UW-300-B	UG-100
1/2”	UF-50-M	UH-50-M	UM-50-M	N/A	UW-300-B	UG-100
3/4”	UF-75-M	UH-75-M	UM-75-M	170-6	UW-300-B	UG-100
1”	UF-100-M	UH-100-M	UM-100-M	170-8	UW-300-B	UG-100



Large Drills



33SKA

- Graduated roll throttle
- Ball bearing support for long life and efficient operation
- Heat-treated aluminum housing is high-strength and lightweight



22MA2

- Ball bearing support for long life and efficient operation
- Durable spur gearing
- Governed motor regulates air to the motor to keep drill working at peak of power curve

Model	Free Speed rpm	Capacity In Steel		Spindle	Spindle Attachment	Max Power hp (kw)	Length of Feed in (mm)	Weight lb (kg)	Height Over Spindle in (mm)	Side To Center Distance in (mm)	cfm	NPT Air	
		Capacity In (mm)	Reaming in (mm)									Inlet Size in	Recommended Size Hose in (mm)
22JA1	1,025	9⁄16” (14)	3⁄8” (10)	Stub taper, threaded chuck	5⁄64–1⁄2”	1.75 (1.31)	2.5” (63)	15 (6.8)	16.38” (416)	1.44” (36)	55	1/2”	3/4” (19)
22KA1	725	9⁄16” (14)	7⁄16” (11)	Stub taper, threaded chuck	5⁄64–1⁄2”	1.75 (1.31)	2.5” (63)	15.25 (6.92)	17.63” (448)	1.44” (36)	55	1/2”	3/4” (19)
22MA2	350	7⁄8” (22)	5⁄8” (16)	No. 2 Morse taper	N/A	1.75 (1.31)	2.5” (63)	14.25 (6.46)	18.63” (473)	1.44” (36)	55	1/2”	3/4” (19)
22KWA1	725	N/A	N/A	Stub taper, threaded wood	1⁄2” shank	1.75 (1.31)	2.5” (63)	14.25 (6.46)	17.25” (438)	1.44” (36)	55	1/2”	3/4” (19)
33SJA	450	1” (25)	15⁄16” (24)	No. 3 Morse taper	N/A	3.0 (2.24)	4.25” (108)	25.75 (11.7)	14” (355)	1.88” (47)	85	1/2”	3/4” (19)
33SKA	300	1-1⁄4” (32)	1” (25)	No. 3 Morse taper	N/A	3.0 (2.24)	4.25” (108)	25.75 (11.7)	14” (355)	1.88” (47)	85	1/2”	3/4” (19)
33SMA	185	1-1⁄4” (32)	1-1⁄4” (32)	No. 3 Morse taper	N/A	2.9 (2.16)	4.25” (108)	31 (14.1)	16.81” (427)	1.94” (49)	85	1/2”	3/4” (19)
44SMA	155	2” (51)	2” (51)	No. 4 Morse taper	N/A	3.6 (2.69)	4.25” (108)	43.75 (19.8)	18.25” (463)	2.31” (59)	102	1/2”	3/4” (19)
551SMA	120	3” (76)	2-1⁄2” (64)	No. 5 Morse taper	N/A	5.6 (4.18)	5” (127)	69 (31.3)	21.88” (556)	2.94” (75)	160	1”	1” (25)
551SOA	77	Heavy	Heavy	No. 5 Morse taper	N/A	5.6 (4.18)	5” (127)	69.5 (31.5)	21.88” (556)	2.94” (75)	160	1”	1” (25)

Large Drill Accessories

Part Number	Description	For Use With
SQUARE DRIVE SOCKET ADAPTER		
DE-215A	1/2” square drive socket adapter	22 Series
NUTS / CHUCKS		
DE-99C	3-jaw key chuck	22 Series
TO5-99A	3-jaw key chuck	22 Series
T12-347	Chuck nut	33 Series
TA-461	Nut	551 Series
MORSE TAPER SOCKET		
DE-323A-2	No. 2 Morse taper socket	22 Series
WOOD BIT CHUCKS AND ACCESSORIES		
K-27	Wood bit chuck wrench	22 Series
TA-A291	Wood bit chuck assembly	551 Series
LARGE DRILL ACCESSORIES		
TC-365	Suspension ring	33 Series
TC-461	Feed screw cover	33 Series



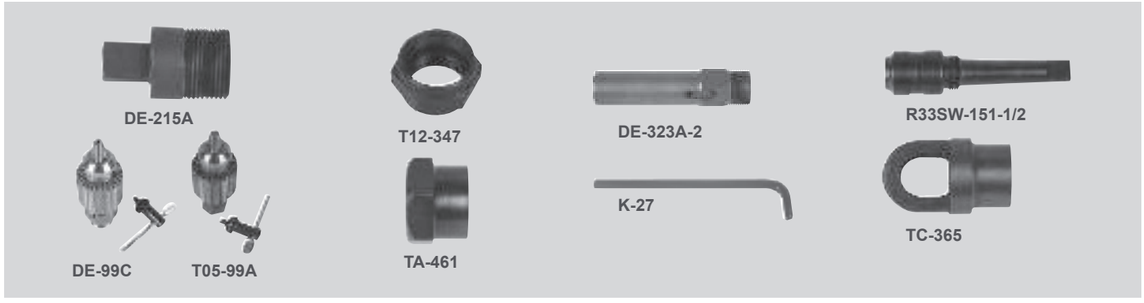

Ingersoll Rand

Learn more at www.ingersollrand.com

Ingersoll Rand (NYSE:IR), driven by an entrepreneurial spirit and ownership mindset, is dedicated to helping make life better for our employees, customers and communities. Customers lean on us for our technology-driven excellence in mission-critical flow creation and industrial solutions across 40+ respected brands where our products and services excel in the most complex and harsh conditions. Our employees develop customers for life through their daily commitment to expertise, productivity and efficiency.

©2022 Ingersoll Rand. PTL_075_04_2022_ConstructionTools