Ingersoll Rand®

Industrial Lifting Equipment



Contents



Air Chain Hoists 3

CLK Series - 0.125 to 0.50 metric ton capacities
MLK and HLK Series — 0.25 to 6 metric ton capacities
7700 Series and 7790 Series link chain hoists — 0.125 to 2 metric ton capacities



Electric Chain Hoists 28

Quantum Series — 0.125 to 5 metric ton capacities
ULE2 Ultra-Lo Series — 1 to 24 U.S. ton capacities



Trolleys, Beam Clamps and Towing Tractors 36

Trolley and Tractor Selection Guide

PT Series trolley – 0.50 to 10 metric ton capacities
GT Series trolley – 1 to 20 metric ton capacities
TIR Series trolley – 0.25 to 6 metric ton capacities
RT Series trolley – 1 metric ton capacity
BC Series clamp – 1 to 10 metric ton capacities
MKT Series tractor – 6 metric ton towing capacity

HOIST MANUFACTURERS INSTITUTE

INDUSTRIAL SUPPLY ASSOCIATION

MATERIAL HANDLING INDUSTRY OF AMERICA®

ISO 9001 CERTIFIED

Air Chain Hoists



Air chain hoists are the ideal choice when high speed, high duty-cycle, precision spotting, and the ability to operate in harsh environments are the determining factors. No one knows air chain hoists like Ingersoll Rand.

We offer the broadest range of air chain hoists in the world. This section highlights our offering of production hoists ranging in capacity from 0.125 to 6 metric tons.

The MLK and HLK Series hoists have proven themselves for years in the most difficult environments. The 7700 and 7790 Series hoists are renowned for exceptional speed and load control. The CLK Series hoist offer superior load control and low air consumption.

Our sales team and channel partners are available to help with selection, related accessories, and options to provide the optimal solution to your lifting and positioning challenges. Spare parts and our authorized service centers are there to keep them running in peak condition.

Visit our website at www.ingersollrandproducts.com to see our high-capacity chain hoists (up to 200 metric tons) and other products.

Air chain hoists selection guide

Model	Lifting Capacity lb	Lifting Capacity metric tons	# Falls	Lifting Speed Rated Load ft/min	Lifting Speed Rated Load m/min	Lowering Speed Rated Load ft/min	Lowering Speed Rated Load m/min	Hook Mount Headroom in	Hook Mount Headroom mm	Trolley Mount Headroom in	Trolley Mount Headroom mm	Shipping Weight Top Hook lb	Shipping Weight Top Hook kg	Page No.
CLK SERIES														
CL125K	275	0.125	1	43	13.1	37	11.3	11.5	292.1	14.1	358.1	34	15.4	6
CL250K	550	0.25	1	32	9.8	45	13.7	11.5	292.1	14.1	358.1	34	15.4	6
CL500K	1100	0.50	2	15	4.6	22	6.7	12.75	323.9	15.35	389.9	38	17.2	6
MLK SERIES AND HLK SERIES														
ML250K	550	0.25	1	101	30.8	117	35.7	18	457.2	18	457.2	48	21.8	10
ML250KS	550	0.25	1	40	12.2	90	27.4	18	457.2	18	457.2	48	21.8	10
ML250KR	550	0.25	1	26	7.9	38	11.6	18	457.2	18	457.2	48	21.8	10
ML500K	1,100	0.5	1	55	16.8	97	29.6	18	457.2	18	457.2	48	21.8	10
ML500KS	1,100	0.5	1	22	6.7	66	20.1	18	457.2	18	457.2	48	21.8	10
ML500KR	1,100	0.5	2	13	4	20	6.1	18	457.2	18	457.2	61	27.7	10
ML1000K	2,200	1	2	28	8.5	49	14.9	18	457.2	18	457.2	61	27.7	10
ML1000KS	2,200	1	2	11	3.4	33	10.1	18	457.2	18	457.2	61	27.7	10
HL1000K	2,200	1	1	26	7.9	37	11.3	18.5	469.9	18.1	460.5	84	38.1	10
HL1000KR	2,200	1	1	26	7.9	37	11.3	18.5	469.9	18.1	460.5	84	38.1	10
HL1500K	3,300	1.5	1	16	4.9	26	7.9	18.8	477.5	18.9	479.5	84	38.1	10
HL2000K	4,400	2	2	13	4	18	5.5	23	584.2	21.6	549.4	125	56.7	10
HL3000K	6,600	3	2	8	2.4	13	4	25	635	22.6	574.8	125	56.7	10
HL4500K	10,000	4.5	3	4.6	1.4	10	3.1	30.9	784.4	28	711.2	193	87.5	10
HL6000K	13,200	6	4	3.5	1.1	7.6	2.3	36.2	919.2	32.2	817.6	248	112.5	10
ARO SERIES														
7770E	275	0.125	1	110	33.5	275	83.8	17	432	16.9	428	41	18.6	19
7718E	550	0.25	1	82	25	224	68.3	17	432	16.9	428	41	18.6	19
7756E	1,100	0.5	1	41	12.5	112	34.1	17	432	16.9	428	41	18.6	19
7776E	2,200	1	2	21	6.4	56	17.1	21.7	551	20.5	521	53	24	19
7790A	2,200	1	1	26	7.9	44	13.4	18.9	479	15	381	62	28.1	19
7792A	4,400	2	2	12	3.7	24	7.3	22.4	568	18	457	81	36.7	19
7712EL	550	0.25	1	50	15.2	70	21.3	17	432	17.1	435	41	18.6	19
7714EL	1,500	0.68	2	16	4.9	16	4.9	17	432	17.1	435	41	18.6	19
7796AL	1,500	0.68	1	16	4.9	16	4.9	18.9	479	15	381	62	28.1	19
7798AL	2,400	1.1	2	12	3.7	12	3.7	22.4	568	18	457	81	36.7	19
7799AL	3,000	1.36	2	7	2.1	7	2.1	22.4	568	18	457	81	36.7	19

All Ingersoll Rand Series hoists meet or exceed ASME/ANSI B30.16 standards. Please consult factory for hoists that meet the European machinery directive (EC) and carry the CE mark.

Choosing the right hoist

Material handling needs differ from application to application. Ingersoll Rand offers numerous hoist types with a range of options that can be matched to meet your specific requirements. When the time comes to select the appropriate hoist for your needs, consider the following criteria:

Maximum load

Consider the maximum load the hoist will need to accommodate. Ingersoll Rand hoists have weight ratings from 275 lb to 6 tons. Consider hoist speed. The speed requirement of a hoist is dependent on the corresponding cycle time of the task to be performed – lift, transport, lower, return, start again.

Installation requirements

Ingersoll Rand hoists, whether hook or trolley, can be mounted on several beam configurations. Compact for low headroom requirements, these hoists can be mounted in areas where others can't.

Air supply

To ensure maximum operating performance, Ingersoll Rand rotary-vane air hoists require air supplies that continually provide clean, lubricated air at sufficient pressure and volume. Ingersoll Rand hoists require 90 psig at 32 to 70 scfm.

Control method

Our rotary-vane air hoists control lift and descent by admitting proportional amounts of air to the motor through a valve. Ingersoll Rand offers two control systems:

1. Pendent control system — a 3-hose pilot pressure / bleed system opens and throttles the valve.
2. Pull-chain system — operator-controlled pull chains attached to arm open and close the valve.



CLK Series

Pneumatic hoists: 125-, 250-, and 500-kg models

Disc brake is non-asbestos and spring-engaged with an air release that offers significant control while minimizing air consumption.

A two-stage differential transmission multiplies motor torque and reduces speed. Oil lubrication helps create maximum durability. Gearing components are made from high-strength, heat-treated steel alloy.

Forged five-pocket pocket wheel provides for smooth lifts and enhanced chain life.

Specially designed slack chain opening prevents dangerous cross-linking by guiding chain to the drive wheels.

Upper and lower limit stops prevent dangerous over-travel of the hook in either direction, reducing possible damage to hoist and load.

100% duty cycle multi-vane (6) air motor offers a high-torque and low-maintenance design. Air porting under the vanes creates smooth operation, positive starting, and long life.

Double reeving is used on 500-kilogram units only.

Bottom latch-type swivel hooks meet OSHA requirements and are supported by anti-friction needle type thrust bearings.

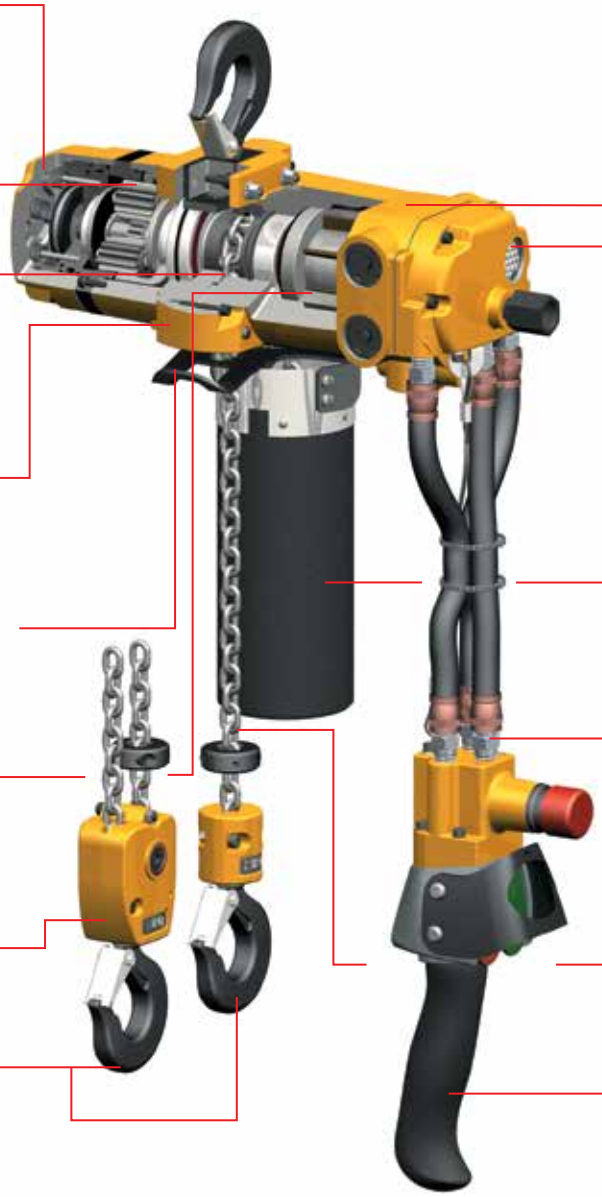

High-strength aluminum housing for maximum portability and weather resistance. Strong yet light-weight with a durable powder-coated finish.

Internal muffler reduces sound levels to a best-in-the-industry 75 dBA.

Optional fabric chain container (available at extra cost) helps keep slack chain out of the way.

Full flow pendent for maximum control and enhanced load positioning capabilities.

Standard link load chain is zinc-plated steel DAT grade 80.

Ergonomic pendent handle (shown with optional E-stop) is rugged and durable. Guard covers both levers and can be used with or without gloves. Optional E-stop (available at extra cost) makes this hoist CE-compliant.

CLK Series

Pneumatic hoists: 125-, 250-, and 500-kg models

CLK Series Specifications

Model	Capacity lb	Capacity kg	# Falls	Hook Mount Headroom in	Hook Mount Headroom mm	Trolley Mount Headroom in	Trolley Mount Headroom mm	Lifting Speed Rated Load ft/min	Lifting Speed Rated Load m/min	Lifting Speed No Load ft/min	Lifting Speed No Load m/min	Lowering Speed Rated Load ft/min	Lowering Speed Rated Load m/min	Lowering Speed No Load ft/min	Lowering Speed No Load m/min	Chain Size	Chain Weight (per foot of lift) lb	Chain Weight (per foot of lift) kg	Net Weight w/10 ft of Lift lb	Net Weight w/10 ft of Lift kg
CL125K	275	125	1	11.5	292.1	14.1	358.1	43	13.1	56	17.1	37	11.3	27	8.2	4 x 12	0.24	0.11	34	15.4
CL250K	550	250	1	11.5	292.1	14.1	358.1	32	9.8	56	17.1	45	13.7	27	8.2	4 x 12	0.24	0.11	34	15.4
CL500K	1100	500	2	12.75	323.9	15.35	389.9	15	4.6	26	7.9	22	6.7	13	4.0	4 x 12	0.48	0.22	38	17.2

Working pressure from 5 to 7 bar (70 to 100 psi). Air consumption @ rated load — all models 0.9 m (32 cfm). Air inlet 3/8″ NPT. Sound level 75 dBA.

CL125K and CL250K

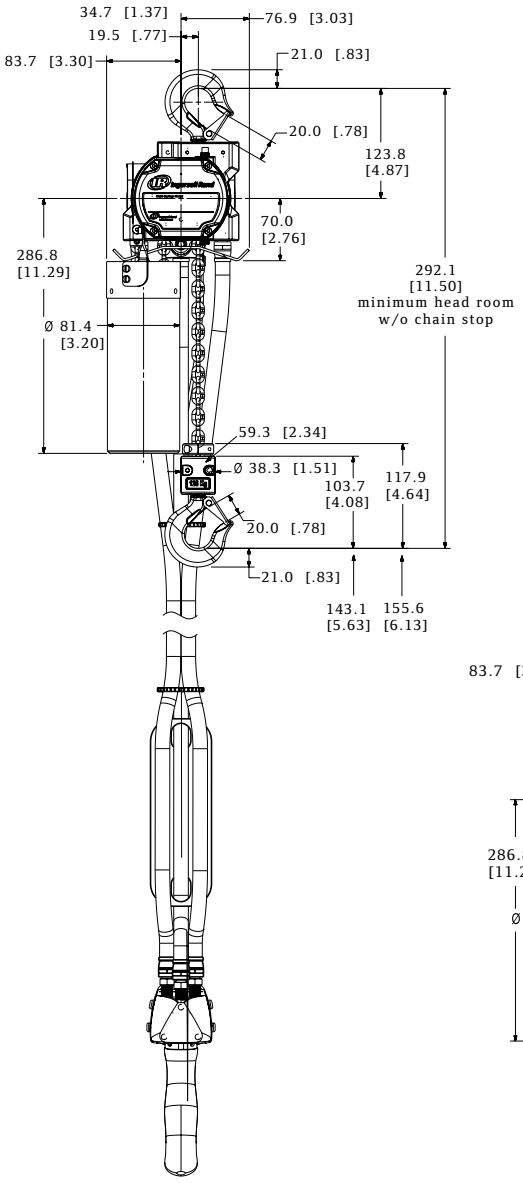

CL125K and CL250K

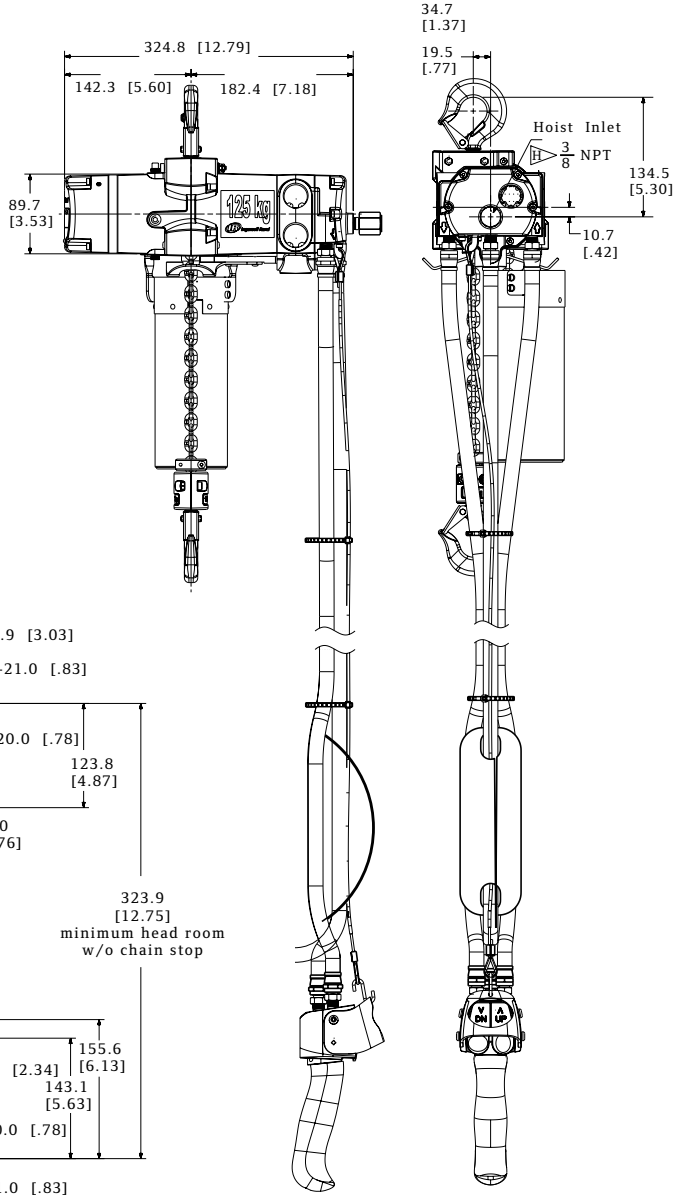

CL500K

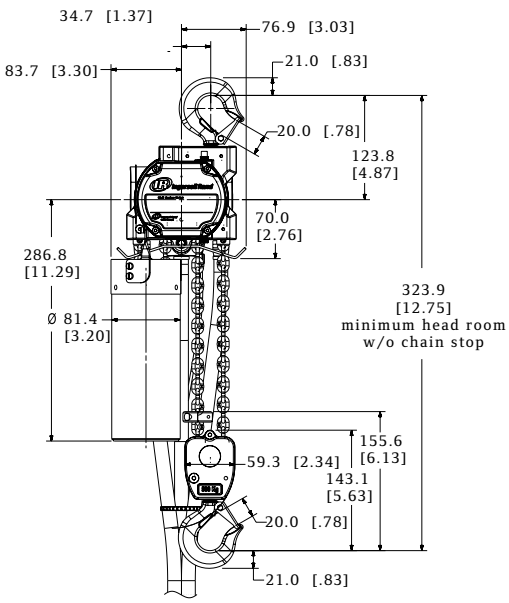

Accessories

Pneumatic hoists: 125-, 250-, and 500-kg models

PT Series Hook-on Trolley

Model	Capacity lb	Capacity metric tons	Flange Adjustment in	Min. Beam Height in	Min. Curve Radius in	Weight lb	Kit no. (order separate)	Flange Adjustment in	Weight lb
STANDARD SERIES									
PT005-8	1,100	0.50	2.6 – 8	4	36	19.7	PT005-WFK	8 – 13	5.5

Wheels are cast iron and the universal tread fits either flat or tapered beams.



PT005-8

Cousin to the PT Series trolley, the twin suspension shaft RT Series trolley offers a rigid connection for the CLK Series of air chain hoists. Lug adapter CL250K-425 is required for use with the RT trolley.

RT010 Series Trolley

Trolley Part Number	Capacity metric tons	Fits Beam Flange Width in	Minimum Turning Radius in
RT010	0.25 - 1	2.7 - 6	36

Wheels have universal tread for use on flat or tapered beams.



Filters - Regulators - Lubricators

Part No.	Size (in) NPTF	Flow Rate scfm	Adj. Pressure Range psig	Bowl Capacity oz	Height x Width in
TRIO UNITS: FILTERS, REGULATORS, LUBRICATORS					
C38341-810	1/2	150	5 – 250	4	6 x 8.7
C38451-810	3/4	200	5 – 250	4	8.6 x 11.1
C38461-810	1	215	5 – 250	4	8.6 x 11.1



C38341-810

Quick Exhaust Valves

Part Number	For Use With	Control Type	Style	Pendent Length ft
MR-939	All CLK Series	Full-flow	3/8″ NPT	15 – 40

The first pair of full-flow valves will be installed between 7 and 8 ft from the pendent handle after pendent hose length reaches 16 ft. Any additional valves will equally divide the remaining hose length.

E-Stop Pendent Handle

Part Number	Description
45667359	Pendent handle assembly with E-stop function



E-Stop Pendent Handle

Link Chain Canvas Basket

Part No.	Capacity ft
CL250K-749-20	20
CL250K-749-40	40



Link Chain Canvas Basket

Industry-leading durability, precision, and flexibility

Ingersoll Rand, the most trusted name for quality, high-value hoists, introduces the CLK Series, including 125-, 250- and 500-kilogram models.

The CLK Series is the smart choice for:

- Durability that delivers more uptime — With a FEM/ISO mechanism classification of 1Am/M4 (ASME HST-5 rating of A5), CLK Series hoists are duty-rated to go an incredible 800 full-load hours between overhauls.
- Lifting speed and precision control for enhanced ease of use — Lifting speed of 43 fpm (13.1m/min) for the 125 kg models and 32 fpm (9.8m/min) for the 250 kg models is the **best in its class**. Enhanced load "positioning" capabilities and an outstanding combination of motor control and brake release make this hoist ideal for precision applications.
- "Best-in-the-industry" quiet operation enhances safety and decreases operator fatigue — Sound levels of just 75 dBA make CLK Series hoists easy on operators, while also minimizing the overall ambient noise of the work site.
- Highly efficient air motor saves money — For hoists in its class, CLK Series gets the most performance from your compressed air output. The CLK Series consumes only 32 cfm (0.9 m^3/min) of air lifting rated load and less then 16 cfm (0.5 m^3/min) while lowering load.

For more information on how the CLK Series hoists can generate high return on your equipment investment:

See your local distributor

Call 866-207-6923

Visit
ingersollrandproducts.com

HOW TO ORDER

Specify hoist by complete model number code as illustrated below. Specify accessories separately by part number. Note that 0 is a number, not a letter, in model part numbers.

Example: CL250K-2C10-C6U

C	L	250K	–	2	C	10	–	C	6	U	-	E

Series
C = Series

Link chain type

Capacity
125K = 125 kg = 275 lb
250K = 250 kg = 550 lb
500K = 500 kg = 1,100 lb

Control
0 = No Pendent
2 = Pendent

Suspension
A = Fixed lug (adapts to RT010A trolley)
C = Top hook
DA = Plain rigid trolley

Lift (ft)
10 = 10 ft
200 ft max. - CL125K & CL250K
100 ft. max. - CL500K

Lower hook
C = Steel snap hook

Pendent Control Hose (ft)
6 = 6 ft
40 ft max. pendent hose length

Options
U = Fabric chain container

CE Package
E = Compliance with the European Machinery Directive – will include E-stop pendent control

MLK and HLK Series

0.25 to 6 metric ton lifting capacities

Benefits

- 100 percent duty cycle enables continuous operation
- Dust, dirt, moisture, and corrosive gases kept out of the motor by air pressure — ideal for foundries and electro-plating applications
- Minimum chance of electrical shock makes air hoists ideal for highly flammable environments such as chemical plants and refineries; spark-resistant models also available
- Simple pull-chain speed and directional controls provide precise load-spotting capabilities; easy-to-operate pendent air valves provide a variable control signal with adjustable response by a variable orifice. For more precise control, **MLKS slow-speed models are available.**
- Motor, brake, and throttle parts are interchangeable with all current Ingersoll Rand air chain hoists
- Ingersoll Rand air chain hoists are designed and constructed for trouble-free maintenance



Top and bottom latch-type swivel hooks meet OSHA requirements and are supported by anti-friction roller bearings (Bullard Burnham hooks are available for all models, except spark-resistant)

Manual brake release kit allows operators to safely lower a suspended load in a power failure

Air-operated, non-asbestos, self-adjusting disc brake balances effort to motor torque by sensing air pressure in the valve chest, providing precise control and eliminating back-drop encountered with some mechanical brakes; if air supply is interrupted, pressure release causes instantaneous, automatic braking

Heat-treated planetary gearing system provides high-torque capability by splitting the torque path, thereby dividing and balancing the load over more teeth, assuring longer life and reduced maintenance

A small amount of exhaust air flows over chain and drive wheel to help lubricate chain from spent in-line lubrication of motor

Slack chain is guided into drive wheels by a specially designed opening that prevents dangerous cross-linking

Upper and lower limit stops prevent dangerous over-travel of the hook in either direction, reducing possible damage to hoist or load

Fabric or metal container keeps slack chain out of the way

Standard link load chain is zinc-plated steel; stainless steel chain available for 0.25-ton through 1-ton spark-resistant models

Two-piece, single-line hook block entraps chain links and hook bearing without using small load-bearing pins or fasteners

All bearings are either ball- or roller-type to minimize friction

An internal muffler reduces sound levels to 85 dBA; woven to prevent corrosion and clogging

Inlet swivel and strainer are combined for easy hookup from any direction — swivel reduces hose fatigue, especially on hook-mounted units; strainer nipple provides extra assurance of clean air for maximum wear protection

Precision throttle valves for smooth operation and metering of air; valves are poppet-type for ease of maintenance

High-strength aluminum housing is strong yet lightweight for maximum portability and weather resistance

Control adjustment screws provide sensitivity and maximum speed control for pendent models

100 percent duty-cycle multi-vane motor with high torque, low maintenance design, and air porting under vanes for smooth operation, positive starting, and long life

Pilot pendent control provides a variable pressure signal to the valve chest, where flow to hoist is metered accordingly; air does not travel through pendent, thus pendent length does not affect performance; control hoses are small, flexible, and easily converted to different lengths

One-piece, cast-aluminum guarded pendent handle for maximum durability; guards on either side of levers are cast-in for protection against accidental operation; all functional parts are corrosion- and spark-resistant

MLK Series and HLK Series

0.25 to 6 metric ton lifting capacities

Features

MLK Series

The Ingersoll Rand MLK family of hoists is suitable for A5 / H5 severe-duty use in the 0.25 to 1 metric ton range. The MLK Series is designed to be used as a high-speed production hoist; the MLKS* is better suited for slow-speed spotting.

HLK Series

The HLK Series incorporates a larger chain wheel to accommodate 3/8" diameter chain and a lower gear ratio to handle increased load capacities. HLK Series hoist capacities range from 1 to 6 metric tons and are severe-duty rated. Refer to the trolley section on page 61 for plain, geared, and motorized trolleys.

Spark-resistant features

MLKR and HLKR spark-resistant hoists have been designed to give maximum protection in explosive and other hazardous environments.

Components for spark-resistance include:

- Bronze hooks
- Bronze trolley wheels
- Stainless-steel (one part reeving) or aluminum (two parts reeving) lower hook blocks
- Aluminum stop ring (1/4-ton models)
- Stainless-steel load chain
- Stainless-steel pendent levers and bronze valve caps

The load capacity and speeds of MLKR and HLKR Series units are reduced. A restricted motor is used to accomplish this, as stainless-steel chain is not hardened and strength is less than standard alloy chain.



MLK Series



HLK Series

MLK and HLK Series

0.25 to 6 metric ton lifting capacities

MLK and HLK Specifications (performance at 90 psi, 6.3 bar)

Model	Capacity lb	Capacity metric tons	# Falls	Hook Mount Headroom in	Hook Mount Headroom mm	Trolley Mount Headroom in	Trolley Mount Headroom mm	Lifting Speed Rated Load ft/min	Lifting Speed Rated Load m/min	Lifting Speed No Load ft/min	Lifting Speed No Load m/min	Lowering Speed Rated Load ft/min	Lowering Speed Rated Load m/min	Lowering Speed No Load ft/min	Lowering Speed No Load m/min	Chain Size	Chain Weight (per foot of lift) lb	Chain Weight (per foot of lift) kg	Net Weight w/10 ft of Lift lb	Net Weight w/10 ft of Lift kg
ML250K	550	0.25	1	18	457.2	18	457.2	101	30.8	171	52.1	117	35.7	99	30.2	6.4 x 19.5	0.6	0.3	48	21.8
ML250KS	550	0.25	1	18	457.2	18	457.2	40	12.2	71	21.6	90	27.4	53	16.2	6.4 x 19.5	0.6	0.3	48	21.8
ML250KR	550	0.25	1	18	457.2	18	457.2	26	7.9	42	12.8	38	11.6	30	9.1	6.4 x 19.5	0.6	0.3	48	21.8
ML500K	1,100	0.50	1	18	457.2	18	457.2	55	16.8	106	32.3	97	29.6	59	18	6.4 x 19.5	0.6	0.3	48	21.8
ML500KS	1,100	0.50	1	18	457.2	18	457.2	22	6.7	44	13.4	66	20.1	32	9.8	6.4 x 19.5	0.6	0.3	48	21.8
ML500KR	1,100	0.50	2	18	457.2	18	457.2	13	4	21	6.4	20	6.1	15	4.6	6.4 x 19.5	1.1	0.5	61	27.7
ML1000K	2,200	1	2	18	457.2	18	457.2	28	8.5	53	16.2	49	14.9	30	9.1	6.4 x 19.5	1.1	0.5	61	27.7
ML1000KS	2,200	1	2	18	457.2	18	457.2	11	3.4	22	6.7	33	10.1	16	4.9	6.4 x 19.5	1.1	0.5	61	27.7
HL1000K	2,200	1	1	18.5	469.9	18.1	459.7	26	7.9	40	12.2	37	11.3	26	7.9	9.5 x 25.7	1.3	0.6	84	38.1
HL1000KR	2,200	1	1	18.5	469.9	18.1	459.7	26	7.9	40	12.2	37	11.3	26	7.9	9.5 x 25.7	1.3	0.6	84	38.1
HL1500K	3,300	1.50	1	18.8	477.5	18.9	480.1	16	4.9	28	8.5	26	7.9	16	4.9	9.5 x 25.7	1.3	0.6	84	38.1
HL2000K	4,400	2	2	23	584.2	21.6	548.6	13	4	20	6.1	18	5.5	13	4	9.5 x 25.7	2.6	1.2	125	56.7
HL3000K	6,600	3	2	25	635	22.6	574	8	2.4	14	4.3	13	4	8	2.4	9.5 x 25.7	2.6	1.2	125	56.7
HL4500K	9,900	4.50	3	30.9	784.9	28	711.2	4.6	1.4	10.5	3.2	10	3.1	6.6	2	9.5 x 25.7	3.9	1.8	193	87.5
HL6000K	13,200	6	4	36.2	919.5	32.2	817.9	3.5	1.1	8.4	2.6	7.6	2.3	4.8	1.5	9.5 x 25.7	5.2	2.4	248	112.5

Working pressure from 5 to 7 bar (70 to 100 psi). Air Consumption @ rated load - ML250KS, ML250KR, ML500KS,ML500KR, ML1000KS = 1.27m³ (45 cfm) all other models = 1.98m³ (70 cfm). Air inlet 1/2" NPT. Sound level 85 dBA.

Trolley Mount Specifications

Model	Trolley type	Capacity metric tons	Minimum Headroom in	Minimum Headroom mm	Trolley Speed at Rated Load ft/min	Trolley Speed at Rated Load m/min	Air Consumption @ Rated Load ft³/min	Air Consumption @ Rated Load m³/min	Trolley Flange Adjustment in	Trolley Flange Adjustment mm	Minimum Curve Radius ft	Minimum Curve Radius m	Air Inlet	Net Weight w/10 ft of Lift lb	Net Weight w/10 ft of Lift kg
ML250K, KS, KR	Plain	0.25	18	457	-	-	-	-	2.66-12	68-305	3.5	1.1	-	68	31
	Geared	0.25	18	457	-	-	-	-	2.66-12	68-305	3.5	1.1	-	71	32
	Motor	0.25	18	457	95	29	35	1	2.66-12	68-305	3.5	1.1	1/4	78	35
ML500K, KS, KR	Plain	0.50	18	457	-	-	-	-	2.66-12	68-305	3.5	1.1	-	68	31
	Geared	0.50	18	457	-	-	-	-	2.66-12	68-305	3.5	1.1	-	71	32
	Motor	0.50	18	457	95	29	35	1	2.66-12	68-305	3.5	1.1	1/4	78	35
ML1000K, KS	Plain	1	17	432	-	-	-	-	2.66-12	68-305	3.5	1.1	-	81	37
	Geared	1	17	432	-	-	-	-	2.66-12	68-305	3.5	1.1	-	84	38
	Motor	1	17	432	93	28	35	1	2.66-12	68-305	3.5	1.1	1/4	91	41
HL1000K, KR	Plain	1	18	457	-	-	-	-	3.25-12	83-304	3.5	1.1	-	106	48
	Geared	1	18	457	-	-	-	-	3.25-12	83-304	3.5	1.1	-	109	50
	Motor	1	18	457	93	28	35	1	3.25-12	83-304	3.5	1.1	1/4	116	53
HL1500K	Plain	1.50	18	457	-	-	-	-	3.25-12	83-304	3.5	1.1	-	106	48
	Geared	1.50	18	457	-	-	-	-	3.25-12	83-304	3.5	1.1	-	109	50
	Motor	1.50	18	457	84	25	35	1	3.25-12	83-304	3.5	1.1	1/4	116	53
HL2000K	Plain	2	22	559	-	-	-	-	3.25-12	83-304	3.5	1.1	-	203	92
	Geared	2	22	559	-	-	-	-	3.25-12	83-304	3.5	1.1	-	206	94
	Motor	2	22	559	80	24	35	1	3.25-12	83-304	3.5	1.1	1/4	213	97
HL3000K	Plain	3	23	584	-	-	-	-	3.25-12	83-304	3.5	1.1	-	203	92
	Geared	3	23	584	-	-	-	-	3.25-12	83-304	3.5	1.1	-	206	94
	Motor	3	23	584	71	22	35	1	3.25-12	83-304	3.5	1.1	1/4	213	97
HL4500K	Plain	4.50	27	686	-	-	-	-	4.25-7.25	108-184	5	1.5	-	392	178
	Geared	4.50	27	686	-	-	-	-	4.25-7.25	108-184	5	1.5	-	395	180
	Motor	4.50	27	686	60	18	35	1	4.25-7.25	108-184	5	1.5	1/4	402	182
HL6000K	Plain	6	29	737	-	-	-	-	4.25-7.25	108-184	5	1.5	-	442	201
	Geared	6	29	737	-	-	-	-	4.25-7.25	108-184	5	1.5	-	445	202
	Motor	6	29	737	45	14	35	1	4.25-7.25	108-184	5	1.5	1/4	452	205

Working pressure from 5 to 7 bar (70 to 100 psi).

Hoist accessories for MLK and HLK Series

Chain Container

Series	Chain Capacity* ft	Metal Container Part Number	Fabric Container Part Number
MLK	13	ML10-K749	N/A
MLK	17	N/A	ML50K-K749-17
MLK	26	ML20-K749A	N/A
MLK	40	ML20-K749-20	N/A
MLK	45	N/A	ML50K-K749-45
MLK	80	MLK-K750-80	N/A
HLK	20	HLK-K750-20	HLK-K749-20
HLK	40	HLK-K750-40	HLK-K749-40
HLK	85	HLK-K750-80	N/A

**Chain containers are for one-part single lines. For two-part lines, divide capacity by two; for three-part lines by three, etc.*



Metal Container



Fabric Container

Hooks

Series	Capacity metric tons	Bullard-Burnham Top Or Bottom Part Number	Bronze Latch Type* Top Or Bottom Part Number
MLK	0.25	CE110-KBB377	MLK-KRS304
MLK	0.50	CE110-KBB377	ML500KR-K377
MLK	1	CE120-KBB377	N/A
HLK	1	HLK-ABB377	HLK-SR377
HLK	1.50	HLK-ABB377	HL1500K-SR377
HLK	2	HL2000K-ABB377	HL2000K-SR377
HLK	3	HL3000K-ABB377	HL3000K-SR377
HLK	4.50	HL4500K-ABB377	HL4500K-SR377
HLK	6	HL6000K-ABB377	HL6000K-SR377



Bullard-Burnham hook

Bullard-Burnham hooks are not available for spark-resistant models.
**Not pictured.*

Manual Brake Release Kit (M)

For all MLK Series and HLK Series hoists. Part number MLK-K390.

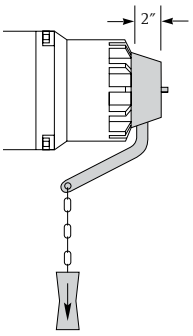

Piped-away Exhaust Kits for MLK Series and HLK Series Hoists

Part Number MHLK-KEXH

This two-piece kit replaces swivel air inlet on hoist. Noise is reduced with addition of piped-away exhaust hose. Use 1″ diameter exhaust hose to minimize reduction in lift speed.

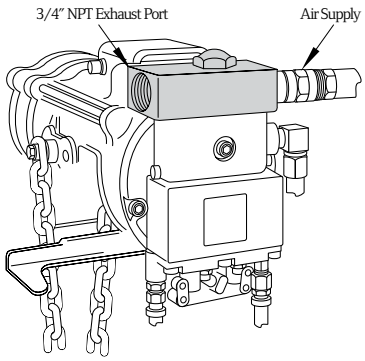

Hose Trolleys

Part Number	Flange Width in
7703	2.33 to 5
D10-8888	5 to 8.75

Maximum hanging weight per unit is 35 lb; each can be adjusted to fit 1/2″ to 1-1/4″ O.D. hoses.



7703

Hoist accessories for MLK and HLK Series

Pendent Handles

Type / Part Number	NPT Air Inlet A in	B in	C in	D in
SINGLE-MOTOR				
MLK-A269C	1/8	1/8	N/A	N/A
EZG-A269	3/8	1/8	N/A	N/A
MR-269C	3/8	3/8	N/A	N/A
C6H20A-A169B	1/2	1/2	N/A	N/A
TWO-MOTOR				
PILOT-A122B	3/8	1/8	1/8	N/A
MLK-K122B	3/8	1/8	3/8	N/A
MR-A122C	3/8	3/8	3/8	N/A
C6H20A-A122B	1/2	1/2	3/8	N/A
THREE-MOTOR				
PILOT-A132B	3/8	1/8	1/8	1/8
MLK-K132B	3/8	1/8	3/8	3/8
MR-A132C	3/8	3/8	3/8	3/8
C6H20A-A132B	1/2	1/2	3/8	3/8

When a pendent-controlled hoist is purchased with a pendent-controlled power trolley or tractor, the required two- or three-motor pendent is furnished at no extra cost in place of an individual pendent, when specified.

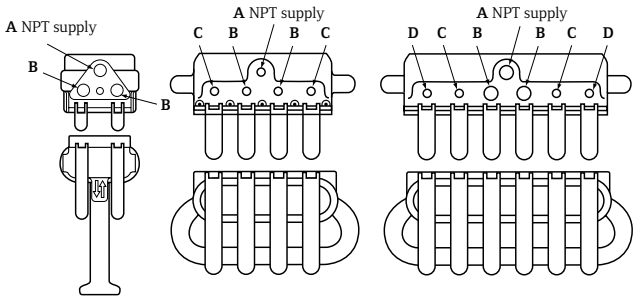

Single motor **Two motor** **Three motor**

Link Load Chain

Series	Type	Bulk Part Number	Chain Size Diameter / Pitch mm
MLK	Zinc-plated*	M745Z	6.4 x 19.5
MLK	Stainless steel**	M745S	6.4 x 19.5
HLK	Zinc-plated*	H745Z	9.5 x 25.7
HLK	Stainless steel**	H745S	9.5 x 25.7

**Standard.*
***For spark-resistant models only.*

Quick Exhaust Valves

Part Number	For Use With	Control Type	Style	Pendent Length ft	Quantity Recommended*
20417	All MLK Series	Pilot	Push-on	21 – 50	2
20417	HLK Series hoists		1/4″ NPT hose	51 – 75	4
MR-939-6	TIR Series trolleys	Full-flow	Push-on	21 – 50	2
MR-939-6	MTK Series tractors		3/8″ NPT hose	51 – 75	4

**The first pair of full-flow valves will be installed between 5′ and 7′ from the pendent handle. Any additional valves will equally divide the remaining hose length.*

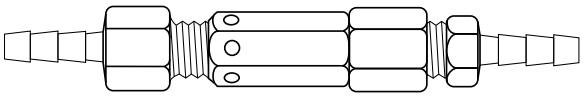

Part number 20417. Part number MR-939-6 not shown.

Pull Chain Conversion

Part Number	Description
MLK-K415A	Wooden directional and crossbar handles only
CA110-B240	Standard chain; specify total length of both chains
DO2-1413	Aluminum spark-resistant chain; specify total length of both chains

Pendent Conversion Kit

Part Number	Description
MLK-AL269C	MLK Series, HLK Series, and HLKR Series hoists; specify length



Drawbar Hitch Kits for Use with MTK Series Tractors

Series	Part Number
HL1000K, HL1500K, HL2000K and HL3000K with rigid trolley	No kit required; standard drawbar kit included with MTK Series tractors fits these hoists
MLK with rigid trolley	MR-K1

MLK, MLKS and MLKR Series

0.25 to 1 metric ton lifting capacities

Dimensions

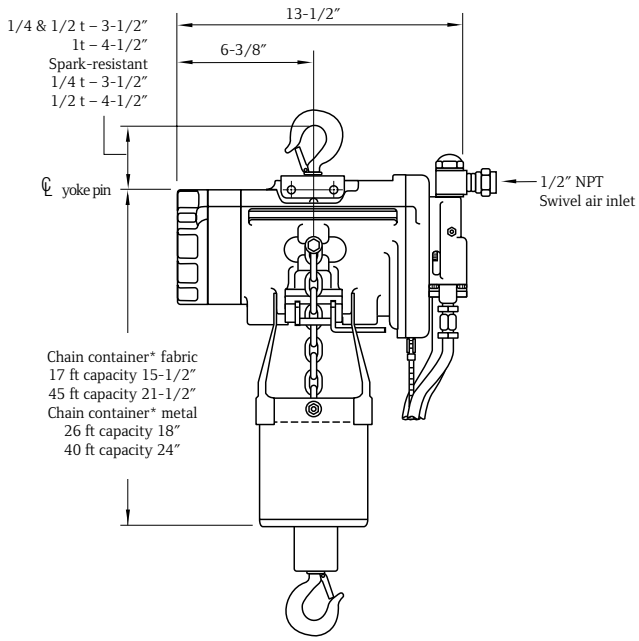

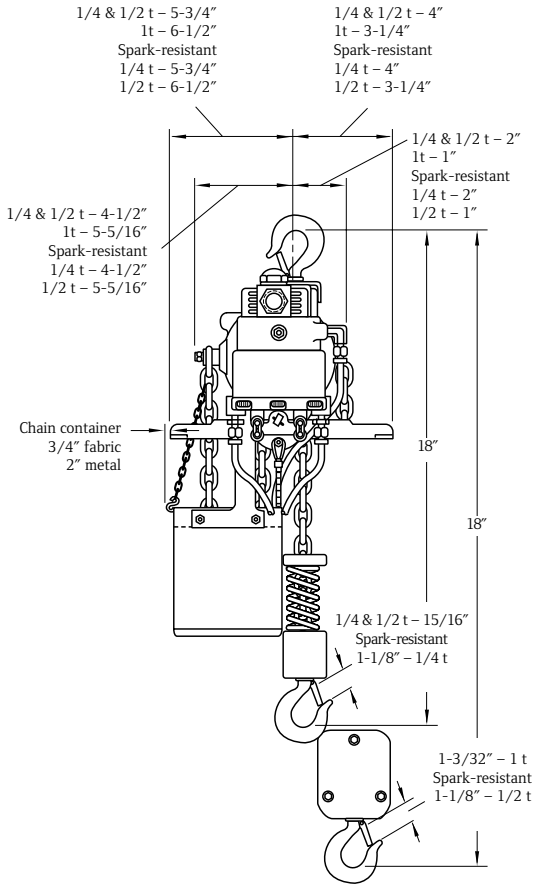

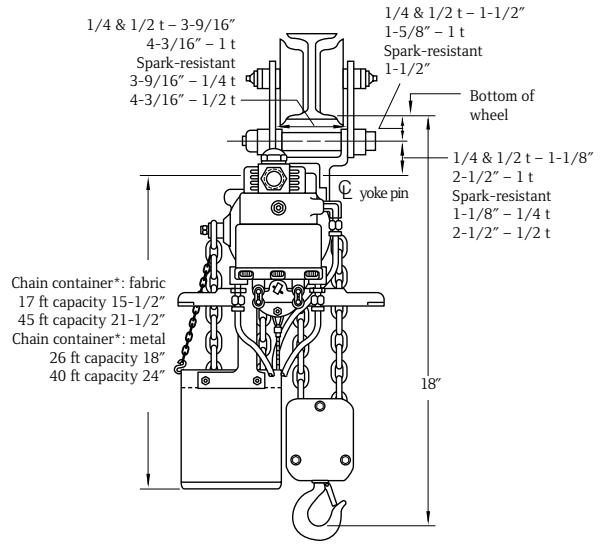

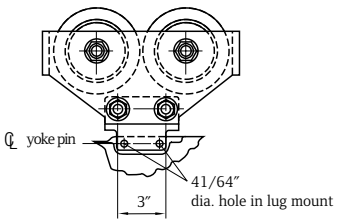

**Chain container capacities are for one-part single lines. For two-part lines, divide capacity by two.*

HLK and HLKR Series

1 to 3 metric ton lifting capacities

Dimensions

Series	A in	B in	C in	D Min in	E in	F in	G in	H in	K in
HL1000K/R	18.5	4.8	7.3	2.4	5.4	3.5	4.5	2.4	18.1
HL1500K	18.5	4.8	7.3	2.4	5.4	3.5	4.5	2.4	18.9
HL2000K	23	3.6	8.4	2.4	6.6	5.8	4.5	2.4	21.6
HL3000K	23	3.6	8.4	2.4	6.6	6.3	4.5	2.4	22.6

**Chain container capacities are for one-part single lines (1- and 1.50-ton). For two-part lines, divide capacity by two.*

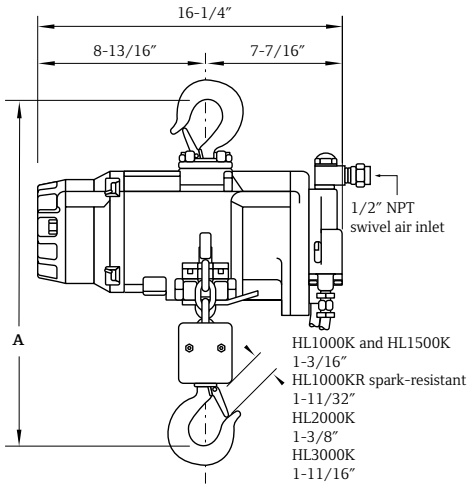

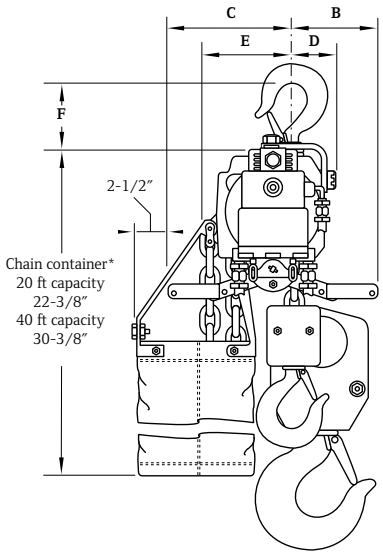

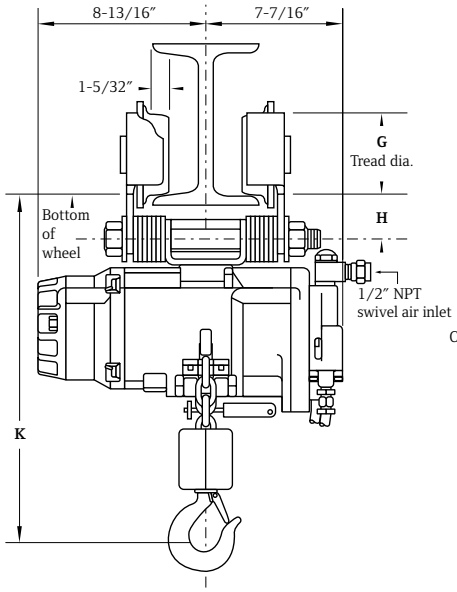

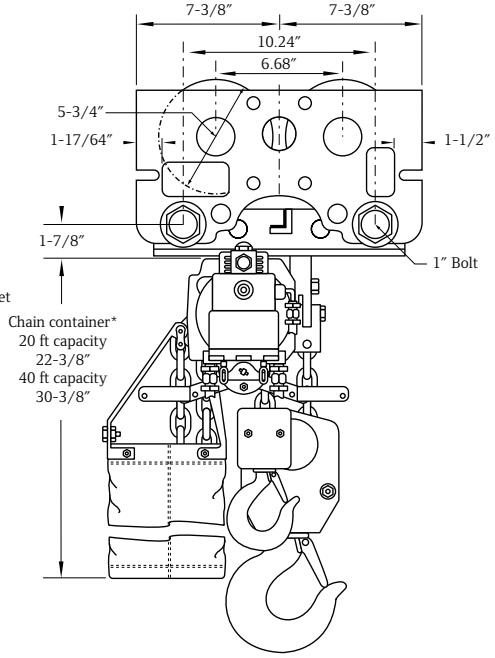

HLK Series

4.50 to 6 metric ton lifting capacities

Dimensions

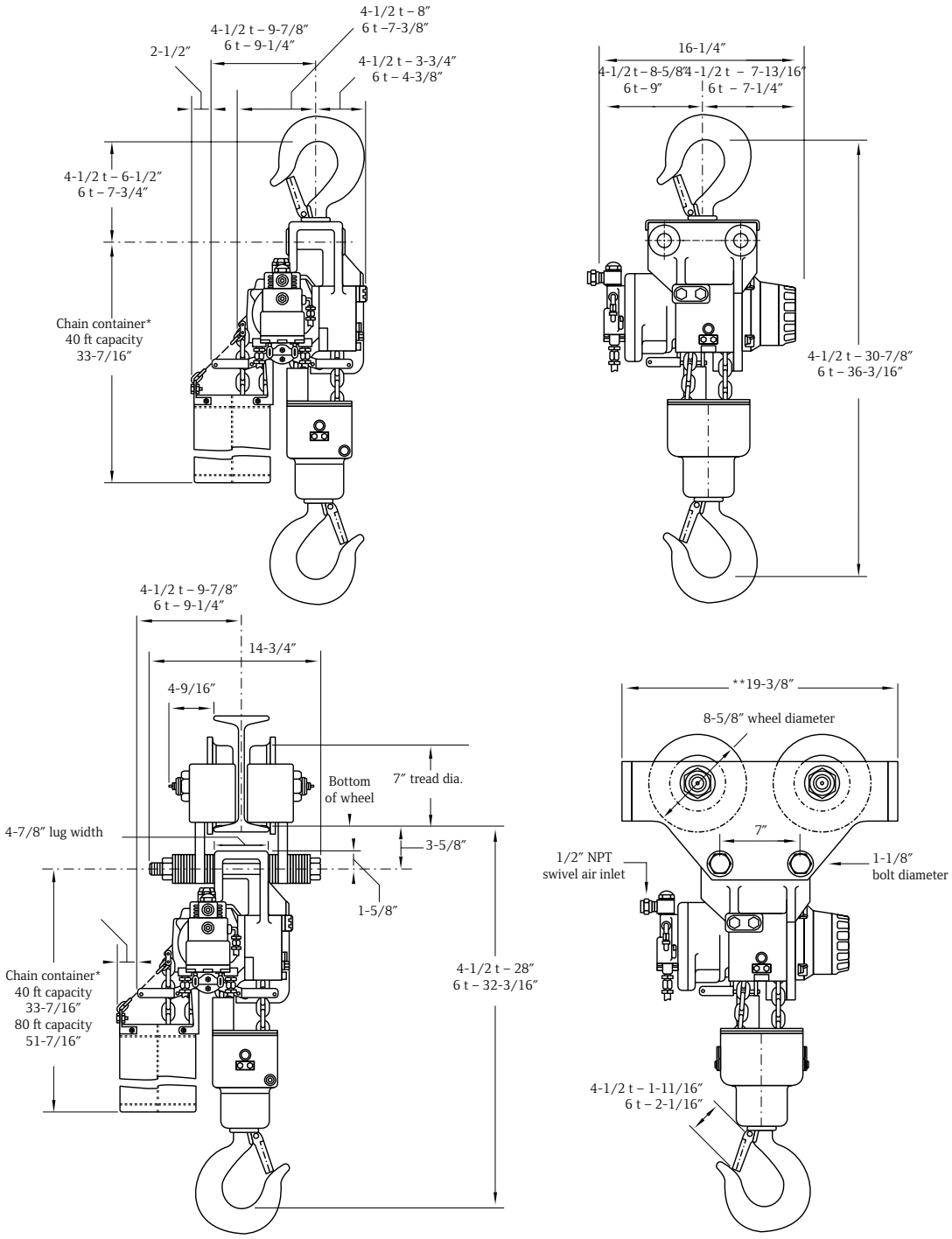

*Chain container capacities are for single-line. For three-part 4.50-ton units, divide capacity by three. For four-part 6-ton units, divide capacity by four.
**For additional geared and motorized trolley dimensions refer to dimensions in the TIR Series trolley section.

MLK and HLK Series

0.25 to 6 metric ton lifting capacities

HOW TO ORDER

Specify hoist by complete model number code as illustrated below. If a trolley is required, specify beam size, type and flange width. Specify accessories separately by part number. Note that 0 is a number, not a letter, in model part numbers.

Example: ML500KR-2R10R6U

M	L	500K	R	-	2	R	10	-	R	6	U

Series
M = Series
H = Series

Link chain type

Capacity

250K	=	250 kg	= 550 lb
500K	=	500 kg	= 1,100 lb
1000K	=	1,000 kg	= 2,200 lb
1500K	=	1,500 kg	= 3,300 lb
2000K	=	2,000 kg	= 4,400 lb
3000K	=	3,000 kg	= 6,600 lb
4500K	=	4,500 kg	= 10,000 lb
6000K	=	6,000 kg	= 13,200 lb

Spark-resistant

R	=	Add for spark-resistant (0.25, 0.50 t MLKR and 1 t HLKR)
S	=	Add for slow speed spotting (0.25, 0.50, 1 t MLKS)

Control

0	=	No controls
1	=	Pull chain
2	=	Pendent
3	=	2 Motor pendent[1]
4	=	3 Motor pendent[1]

Suspension

A	=	Fixed lug
B	=	Bullard hook (self closing)
R	=	Bronze snap hook
C	=	Swivel top hook
CP	=	Copper-plated top hook
DA[3]	=	Plain rigid trolley (universal wheels "A" flange)
DD[3]	=	Plain rigid trolley (universal wheels "D" flange)
FXXA[2][3]	=	Hand geared trolley (universal wheels "A" flange)
FXXD[2][3]	=	Hand geared trolley (universal wheels "D" flange)
HA[3]	=	Vane mtr. powered trolley (universal wheels "A" flange)
HD[3]	=	Vane mtr. powered trolley (universal wheels "D" flange)

Lift (ft)

10	=	10 ft (standard)
XX	=	Specify length

Lower hook

C	=	Steel snap hook
CP	=	Copper-plated lower hook
R	=	Bronze snap hook
B	=	Bullard self-closing hook

Length of pull/chain or pendent control hose (ft)

6	=	10 ft (standard)
XX	=	Specify length

Options

CR	=	Copper-plated bottom block
M	=	Manual brake release kit
P	=	Piped away exhaust
S	=	Steel chain container
U	=	Fabric chain container

NOTE:

(1) Required with "H" suspension.

(2) XX = specify hand chain length if other than standard "08" (8 ft) required.

(3) For solid bronze wheels on non-spark resistant models, add "R" to the end of the trolley suspension code. (See pages 20 and 21 for price.)

7700 Series and 7790 Series link chain hoists

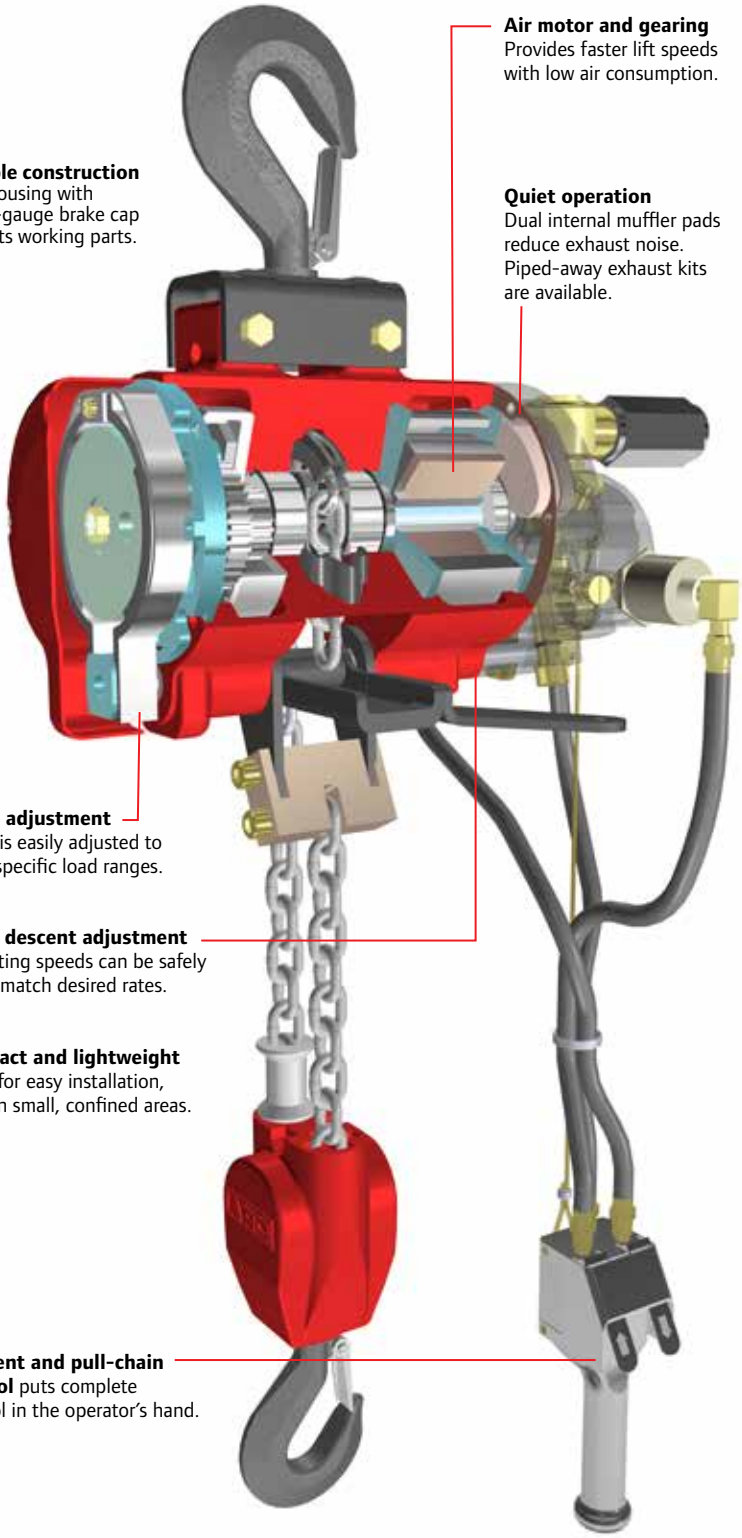

Quality and performance

Ingersoll Rand hoists can be equipped with a variety of optional features that can be matched to the specifications of almost any job. Their long operating life, cost-effective service and maintenance, and dependable performance are supported by a host of standard features.

Rotary-vane air motors

These powerful, self-cooling rotary motors keep Ingersoll Rand hoists at peak performance in high-temperature situations. And, because they are air-powered, they further reduce the chance of causing sparks in a volatile environment.

Complete operator control

A pressure pendent or pull chain puts complete control of the hoist in the operator's hand. These hoists respond immediately to an operator's "inching" commands.

External brake adjustment

Easily customizes the sensitivity of the hoist to the load range for any application. This results in ease of operation with better spotting, feathering, and overall control.

Fast, efficient load handling

Rotary-vane air motors and efficient gearing combine to deliver one of the fastest lift speeds available. Gear ratios have been calculated to yield the lowest possible air consumption.

Job-matched performance

Numerous options allow Ingersoll Rand hoists to be matched to specific application requirements, including link or roller load chains, hook types, manual and power trolleys, pull chain or pendent control, standard and spark-resistant, and 300-lb to 2-ton capacities.

Clean and quiet

For applications and environments that require clean air, exhaust can be piped away. A two-stage filtration system removes foreign matter from air supplies so motors can operate at peak performance with longer operating lives.

Easy installation

Lightweight and convenient, Ingersoll Rand hoists are easier to install than any other model. Even in small, confined areas, they can be installed and removed with minimal effort.

7700 Series and 7790 Series link chain hoists

0.125 to 2 metric ton lifting capacities

Continuous heavy-duty applications

The 7700 and 7790 Series has been designed specifically for heavy-duty industrial applications where loads vary between 275 and 4,400 lb. Simple, rugged, and reliable, these hoists are constructed with few moving parts for easy repair and less downtime. These hoists come complete with 10 feet of standard lift and 6 feet of either pendent control or pull-chain control.







Features

- Exceptional slow-speed control provides superior "spotting" characteristics
- Powerful, self-cooling rotary motors keep hoists at peak performance in high temperatures
- Brake control easily adjusts to meet specific load ranges
- Motor and gearing provide faster lift speeds with low air consumption

7700 Series and 7790 Series Specifications

	Capacity			Hook Mount Headroom		Trolley Mount Headroom		Lifting Speed				Lowering Speed					Chain Weight (per foot of lift)		Net Weight w/10 ft of Lift	
		metric						Rated Load		No Load		Rated Load		No Load		Chain				
Model	lb	tons	# Falls	in	mm	in	mm	ft/min	m/min	ft/min	m/min	ft/min	m/min	ft/min	m/min	Size	lb	kg	lb	kg
7770E	275	0.125	1	17	431.8	16.9	429.3	110	33.5	192	58.5	275	83.8	159	48.5	0.25 x 0.75	0.6	0.3	41	18.6
7718E	550	0.25	1	17	431.8	16.9	429.3	82	25	184	56.1	224	68.3	153	46.6	0.25 x 0.75	0.6	0.3	41	18.6
7756E	1,100	0.50	1	17	431.8	16.9	429.3	41	12.5	72	22	112	34.1	60	18.3	0.25 x 0.75	0.6	0.3	41	18.6
7776E	2,200	1	2	21.7	551.2	20.5	520.7	21	6.4	36	11	56	17.1	30	9.1	0.25 x 0.75	1.7	0.5	53	24
7790A	2,200	1	1	18.9	480.1	15	381	26	7.9	37	11.3	44	13.4	31	9.5	0.312 x 0.858	0.9	0.4	62	28.1
7792A	4,400	2	2	22.4	569	18	457.2	12	3.7	20	6.1	24	7.3	17	5.2	0.312 x 0.858	1.8	0.8	81	36.7

Working pressure from 5 to 7 bar (70 to 100 psi). Air consumption @ rated load - all models 1.98 m (70 cfm). Air inlet 1/2" NPT. Sound level 85 dBA.

Trolley Mount Specifications

Model	Trolley type	Capacity metric tons	Minimum Headroom		Trolley Speed at Rated Load		Air Consumption @ Rated Load		Trolley Flange Adjustment		Minimum Curve Radius		Air Inlet	Net Weight w/10 ft of Lift	
			in	mm	ft/min	m/min	ft^3/min	m^3/min	in	mm	ft	m		lb	kg
7770E	Plain	0.125	17	432	-	-	-	-	2.66-12	68-305	3.5	1.1	-	88	40
	Geared	0.125	17	432	-	-	-	-	2.66-12	68-305	3.5	1.1	-	91	41
	Motor	0.125	17	432	96	30	35	1	2.66-12	68-305	3.5	1.1	1/4	94	13
7718E	Plain	0.25	17	432	-	-	-	-	2.66-12	68-305	3.5	1.1	-	88	40
	Geared	0.25	17	432	-	-	-	-	2.66-12	68-305	3.5	1.1	-	91	41
	Motor	0.25	17	432	95	29	35	1	2.66-12	68-305	3.5	1.1	1/4	94	43
7756E	Plain	0.50	17	432	-	-	-	-	2.66-12	68-305	3.5	1.1	-	88	40
	Geared	0.50	17	432	-	-	-	-	2.66-12	68-305	3.5	1.1	-	91	41
	Motor	0.50	17	432	95	29	35	1	2.66-12	68-305	3.5	1.1	1/4	94	43
7776E	Plain	1	22	559	-	-	-	-	3.25-12	82-305	3.5	1.1	-	100	45
	Geared	1	22	559	-	-	-	-	3.25-12	82-305	3.5	1.1	-	103	47
	Motor	1	22	559	93	28	35	1	3.25-12	82-305	3.5	1.1	1/4	106	48
7790A	Plain	1	15	381	-	-	-	-	3.00-12	76-305	3.5	1.1	-	104	47
	Geared	1	15	381	-	-	-	-	3.00-12	76-305	3.5	1.1	-	107	49
	Motor	1	15	381	93	28	35	1	3.00-12	76-305	3.5	1.1	1/4	110	50
7792A	Plain	2	20	508	-	-	-	-	3.00-12	76-305	3.5	1.1	-	123	56
	Geared	2	20	508	-	-	-	-	3.00-12	76-305	3.5	1.1	-	126	57
	Motor	2	20	508	80	24	35	1	3.00-12	76-305	3.5	1.1	1/4	129	59

Working pressure from 5 to 7 bar (70 to 100 psi).

7700 Series and 7790 Series link chain hoists

Spark-resistant models

Continuous heavy-duty applications

7700 Series — 500 to 1,500 lb capacities

7790 Series — 1,500 to 3,000 lb capacities

7700 Series and 7790 Series spark-resistant hoists are designed for Division 1 applications where, under normal operating conditions, the atmosphere contains hazardous concentrations of flammable gases, dust, or other materials.

Specifically engineered for continuous heavy-duty industrial applications — between 500 and 3,000 lb — Ingersoll Rand 7700 Series and 7790 Series spark-resistant hoists are available with bronze top-hook or trolley adapter suspension. These hoists come complete with 10 feet of standard lift and 6 feet of either pendent control or pull-chain control.

Features

- Stainless steel load chain and solid bronze hooks prevent accidental sparking
- Pendent control handles, when ordered, are covered with an industrial-grade vinyl grip; pull-chain controls come standard with zinc-plated pull chain
- Hoist capacities are reduced and speed adjustments are locked into place to maximize chain life
- Trolley models are supplied with bronze wheels

Division 1 and 2 applications

The following definitions may be used as a guide. The actual division distinction for each application must be determined by your local inspecting authority.

Division 1 (spark-resistant air hoists are required)

Atmospheres containing hazardous concentrations of flammable gases, dusts, or fibers; continuously, frequently, or periodically; under normal operating conditions.

Division 2 (standard air hoists are required)

Normally non-hazardous atmospheres in which a hazardous concentration of flammable gases, dusts, or fibers occurs when a container or handling system fails or the ventilating system that normally keeps the concentration non-hazardous fails.



7700 Series and 7790 Series Spark-resistant Specifications

	Capacity			Hook Mount Headroom		Trolley Mount Headroom		Lifting Speed				Lowering Speed					Chain Weight (per foot of lift)		Net Weight w/10 ft of Lift	
		metric						Rated Load		No Load		Rated Load		No Load						
Model	lb	tons	# Falls	in	mm	in	mm	ft/min	m/min	ft/min	m/min	ft/min	m/min	ft/min	m/min	Chain Size	lb	kg	lb	kg
7712EL	550	0.25	1	17	431.8	17.1	434.3	50	15.2	80	24.4	70	21.3	53	16.2	0.25 x 0.75	0.6	0.3	41	18.6
7714EL	1,500	0.68	2	22.7	576.6	21.3	541	16	4.9	26	7.6	16	4.9	12	3.7	0.25 x 0.75	1.2	0.6	48	21.8
7796AL	1,500	0.68	1	18.9	480.1	15	381	16	4.9	26	7.6	16	4.9	12	3.7	0.312 x 0.858	0.9	0.4	62	28.1
7798AL	2,400	1.1	2	22.4	569	18	457.2	12	3.7	19	5.8	12	3.7	9	2.7	0.312 x 0.858	1.9	0.9	81	36.7
7799AL	3,000	1.36	2	22.4	569	18	457.2	7	2.1	11	3.4	7	2.1	5	1.5	0.312 x 0.858	1.9	0.9	81	36.7

Working pressure from 5 to 7 bar (70 to 100 psi). Air consumption @ rated load - all models 1.98 m (70 cfm). Air inlet 1/2″ NPT. Sound level 85 dBA.

Trolley Mount Specifications

			Minimum Headroom		Trolley Speed at Rated Load		Air Consumption @ Rated Load		Trolley Flange Adjustment		Minimum Curve Radius			Net Weight w/10 ft of Lift	
Model	Trolley type	Capacity metric tons	in	mm	ft/min	m/min	ft^3/min	m^3/min	in	mm	ft	m	Air Inlet	lb	kg
7712-EL	Plain	0.25	17	432	-	-	-	-	2.66-12	68-305	3.5	1.1	-	88	40
	Geared	0.25	17	432	-	-	-	-	2.66-12	68-305	3.5	1.1	-	91	41
	Motor	0.25	17	432	96	30	35	1	2.66-12	68-305	3.5	1.1	1/4	94	43
7714EL	Plain	0.68	22	559	-	-	-	-	3.25-12	82-305	3.5	1.1	-	95	43
	Geared	0.68	22	559	-	-	-	-	3.25-12	82-305	3.5	1.1	-	98	45
	Motor	0.68	22	559	93	28	35	1	3.25-12	82-305	3.5	1.1	1/4	101	46
7796AL	Plain	0.68	15	381	-	-	-	-	3.00-12	76-305	3.5	1.1	-	104	47
	Geared	0.68	15	381	-	-	-	-	3.00-12	76-305	3.5	1.1	-	107	49
	Motor	0.68	15	381	93	28	35	1	3.00-12	76-305	3.5	1.1	1/4	110	50
7798AL	Plain	1.1	20	508	-	-	-	-	3.00-12	76-305	3.5	1.1	-	123	56
	Geared	1.1	20	508	-	-	-	-	3.00-12	76-305	3.5	1.1	-	126	57
	Motor	1.1	20	508	93	28	35	1	3.00-12	76-305	3.5	1.1	1/4	129	59
7799AL	Plain	1.4	20	508	-	-	-	-	3.00-12	76-305	3.5	1.1	-	123	56
	Geared	1.4	20	508	-	-	-	-	3.00-12	76-305	3.5	1.1	-	126	57
	Motor	1.4	20	508	84	25	35	1	3.00-12	76-305	3.5	1.1	1/4	129	59

Working pressure from 5 to 7 bar (70 to 100 psi).

Hoist accessories for 7700 and 7790 Series

Load chain

Ingersoll Rand hoists are offered with several different load chains. Standard hoists come complete with steel load chains. Spark-resistant hoists come with stainless-steel link load chain.

Chain length 7700 Series (0.25-, 0.50-ton), 7790 Series (1-ton)
Length of lift desired + 1 foot = load chain length

Chain length 7700 Series (1-ton), 7790 Series (2-ton)
2 x length of lift desired + 2 feet = load chain length



Link chain

Hoist Used On	Capacity lb	Chain Part No.	Chain Size Dia./Pitch	Weight lb/ft	Feet in Package
ZINC PLATED LINK					
7700 Series	275, 550, 1,100, 2,200	37708	.25 / .75	.6	250
7790 Series	2,200 & 4,400	42988	.312 / .858	.9	250
STAINLESS STEEL LINK					
7700 Series	500, 1,500	39489	.25 / .75	.6	250
7790 Series	1,500, 2,400, 3,000	43095	.312 / .858	.9	250

Hose Carrier Trolley

Easily tracks along same beam that hoist is mounted on. Keeps air hose suspended and out of operator's way. Use one for each 8 feet of hose length.

Part No.	Max Hose O.D. in	Min/Max Beam Height (in)	Min/Max Beam Flange Width (in)
7703	11/4	3-10	2-3/8 - 5
D10-8888			5 - 8-3/4



7703

Restraining Cable

For use as an added safety precaution in hoist suspension. Cable inserts through hole in hoist housing and around I-beam or other structure capable of safely supporting hoist and hoist load weight. Order based upon hoist used.

Hoist Used On	Part No.	Cable Dia. in	Cable Length ft
7700 Series	43231	1/4	2
7790 Series	43059	5/16	3-1/2



43231

Hoist accessories for 7700 and 7790 Series

Chain Baskets

Catches and stores load chain as load is lifted. Mounts directly to side of hoist. Order based upon load chain length and hoist being used. Load chain length on 1-ton 7700 Series hoists and 2-ton 7790 Series hoists is twice the lift distance.

Load Chain Max Lineal Feet	Link Chain (metal basket) 7700	Link Chain (metal basket) 7790	Link Chain (canvas basket[1]) 7700	Link Chain (canvas basket[1]) 7790
10	–	49800 – 10	–	43441 – 1
12	–	–	–	–
16	37653 – 16	–	–	–
20	–	49800 – 20	43554 – 1	43441 – 2
30	–	49800 – 30	–	–
32	37653 – 32	–	43554 – 2	–
40	–	49800 – 40	–	43554 – 3
56	37653 – 64	–	–	–
60	–	49800 – 60	–	–
64	–	–	43554 – 3	–
80	37653 – 80	49800 – 80	–	–
59	37653 –100	49800 – 100	–	–

(1) Canvas baskets are made of specially treated oil-resistant material.



Link Chain Metal Basket



Link Chain Canvas Basket

Exhausts

Piped exhaust[1]

Allows exhaust to be piped to a remote area. This is particularly desirable for applications in food processing, chemicals, and processes where atmospheric purity must be maintained.

How to order: specify as option in Ordering Guide.

20308-4 exhaust muffler

Threads into exhaust port to minimize sound level. Can be used on 7700 and 7790 Series hoists ordered with piped exhaust option.

For field conversion

All 7700 Series hoists may be converted to a piped-away exhaust by ordering 46098-1 Head Assembly.

All 7790 Series hoists (except power trolley models) may be converted to a piped-away exhaust by ordering 43029 Piped Exhaust Adapter.

(1) Hose not included. Exhaust port is 1/2″ NPTF.

Hoist Controls

To convert from pull chain to pendent control: Either nylon braid (standard) or steel braid control hose is available. Steel braid hose is recommended to resist heat or abrasion. Specify the model shown, inserting the pendent length in feet for the *. Maximum 20 feet.

To convert from pendent control to pull chain: Specify 40004-*, where the * is pull chain length desired. Also required are two 34026 valve caps; two Y325-116 O-rings; two 38966 springs and one Y227-3 pipe plug per hoist.



Hoist Used On	Model	Type of Control	Standard Length ft
All 7700E Series	46094-*	Pendent – nylon braid hose	6
All 7700E Series	46369-*	Pendent – steel braid hose	6
All 7790 Series	43106-*	Pendent – nylon braid hose	6
All 7790 Series	46364-*	Pendent – steel braid hose	6
All 7700 & 7790 Series	40004-*	Pull chain	5

Hoist accessories for 7700 and 7790 Series

Hooks

Ingersoll Rand offers three different hook configurations designed to meet the needs of any material handling application. All hooks must be ordered separately by specifying model required according to hoist and beam configurations.

Steel snap-hooks

Steel snap-hooks have a spring-loaded latch to prevent a lifting eye from popping out of the hook while the load is "grounded." This style of self-closing hooks is the most popular as they are easy and inexpensive to replace.

Bullard hooks

Ideal for rough, high-speed, repetitive applications, these hooks employ a swinging gate latch. Far superior in strength to snap-hooks, the gate latch locks into place to minimize any chance of the "end effector" or "below-the-hook" attachment leaving the hook.

Self-Closing latch hooks

Self-closing latch hooks have the benefits of both spring-loaded snap hooks, and Bullard hooks by combining a spring-loaded latch with the strength and durability of the heavier gage Bullard gate.



33381-1 | 43000 | 42799 | 35206 | 44109



43002 | 34921 | 35203 | 45707

Hoist Series	Capacity (lb)	Hooks For Link Chain: Upper Hook	Hook Opening (in)	Lower Hook	Hook Opening (in)	Hooks For Roller Chain: Upper Hook	Hook Opening (in)	Lower Hook	Hook Opening (in)
STEEL SNAP HOOKS									
7700 Series 0.125, 0.25 and 0.50 ton	275/550/1,100	34921	1-1/8	35014	1	34921	1-1/8	33381-1	1
7700 Series 0.25 ton spark res.	500	35113	1-1/8	46565	1	35113	1-1/8	34655-1	1
7700 Series 1 ton	2,200	34921	1-1/8	45707[1]	1-1/8	34921	1-1/8	45708[1]	1-1/8
7700 Series 0.50 ton spark res.	1,000	N/A	–	N/A	–	35113	1-1/8	45710[1]	1-1/8
7700 Series 0.75 ton spark res.	1,500	35113	1-1/8	45709[1]	1-1/8	N/A	–	N/A	–
7790 Series 1 ton	2,200	43002	1-1/8	43000	1-1/8	N/A	–	N/A	–
7790 Series 0.75 ton spark res.	1,500	43097	1-1/8	43110	1	N/A	–	N/A	–
7790 Series 2 ton	4,400	43049	1-1/4	43048[1]	1-1/4	N/A	–	N/A	–
7790 Series 1 ton spark res.	2,400	43096	1-1/4	43101	1-1/4	N/A	–	N/A	–
7790 Series 1.50 ton spark res.	3,000	43096	1-1/4	43101	1-1/4	N/A	–	N/A	–
BULLARD HOOKS									
7700 Series 0.25 and 0.50 ton	550/1,100	35203	1-3/16	35206	1-1/16	35203	1-3/16	35205	1-1/16
7700 Series 1 ton	2,200	35203	1-3/16	45934[1]	1-3/16	35203	1-3/16	45935[1]	1-3/16
7790 Series 1 ton	2,200	43458	1-3/16	43456	1-3/16	N/A	–	N/A	–
7790 Series 2 ton	4,400	43459	1-7/16	43460	1-7/16	N/A	–	N/A	–
SELF-CLOSING LATCH HOOKS									
7700 Series 0.125, 0.25 and 0.50 ton	275/550/1100	N/A	–	42799	1-1/2	N/A	–	N/A	–

(1) Includes Sheave Block

Air Hose



N12-12B

Vinyl Grip



47469

EZ Grip Ergo Handle



EZG-A269

Dimensional drawings

7700 Series Air Chain Hoists

Typical headroom dimensions (A) are indicated in dimensional drawings.

Hook Mounted

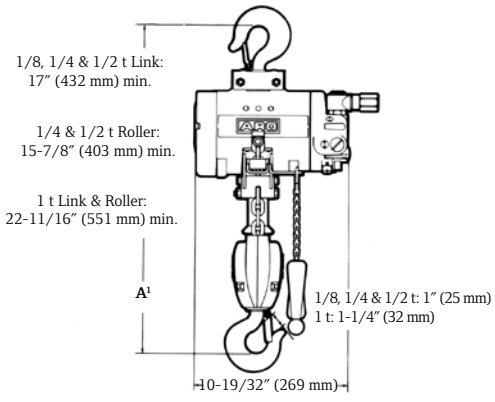

Trolley Mounted

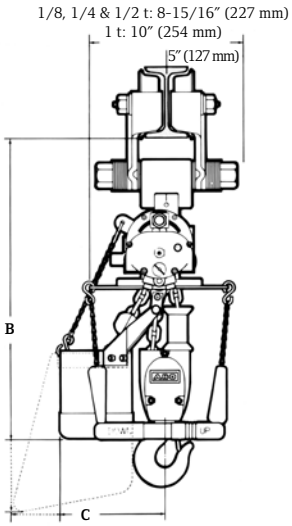

Motorized Trolley Mounted

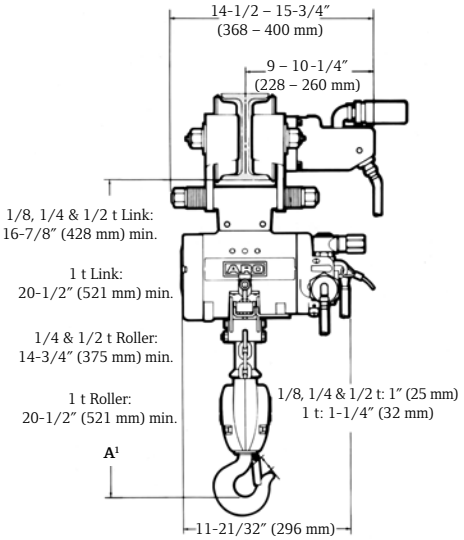

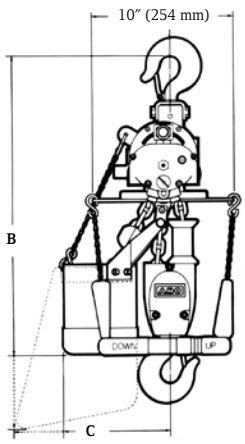

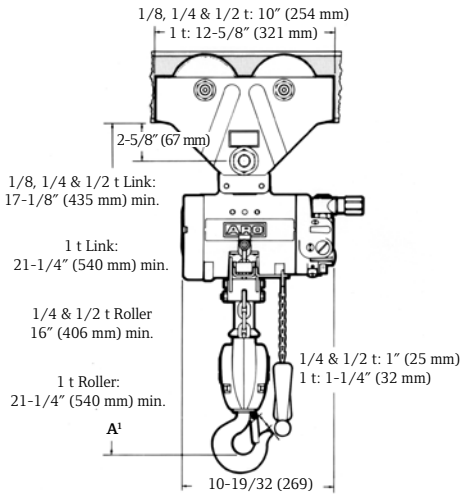

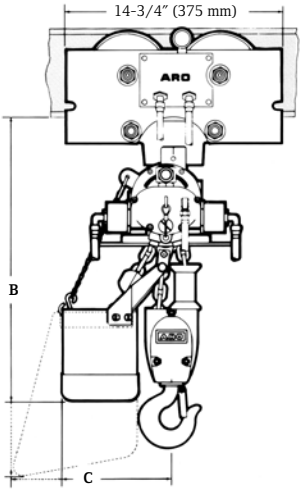

Note:
(1) Dimension "A" for the 7700 Series 0.125-, 0.25- and 0.50-ton hoists increases 1 inch for each Bullard hook used.

Basket Capacity (ft)	Hook Mt (in) B	Hook Mt (in) C	Trolley Mt (in) B	Trolley Mt (in) C	Motorized Trly (in) B	Motorized Trly (in) C
LINK TYPE						
20	21	7.8	21.5	7.8	20.2	7.8
32	25.5	7.8	26	7.8	24.7	7.8
56	31.5	7.8	32	7.8	30.7	7.8

Basket Capacity (ft)	Hook Mt (in) B	Hook Mt (in) C	Trolley Mt (in) B	Trolley Mt (in) C	Motorized Trly (in) B	Motorized Trly (in) C
ROLLER TYPE						
10	25.4	11.2	25.9	11.2	24.9	11.2
16	29.3	14.4	29.8	14.4	28.7	14.4
40	39.9	20.6	40.4	20.6	39.4	20.6

Dimensional drawings

7790 Series Air Chain Hoists

Typical headroom dimensions (A) are indicated in dimensional drawings.

Hook Mounted

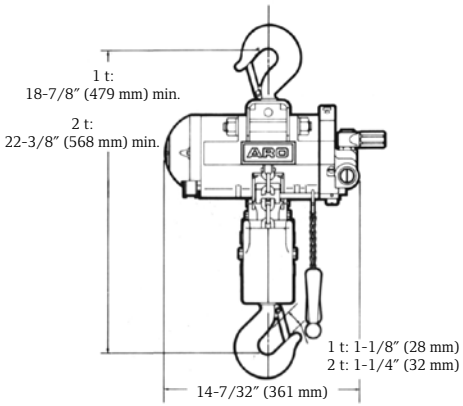

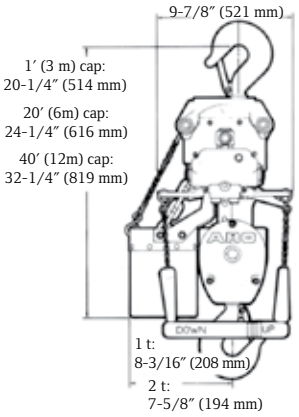

Trolley Mounted

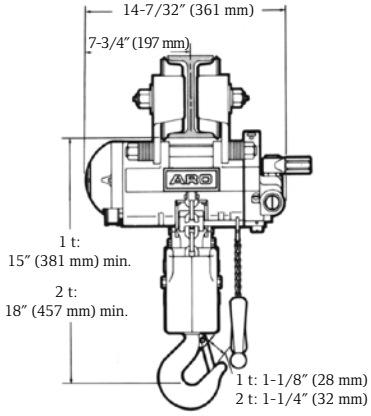

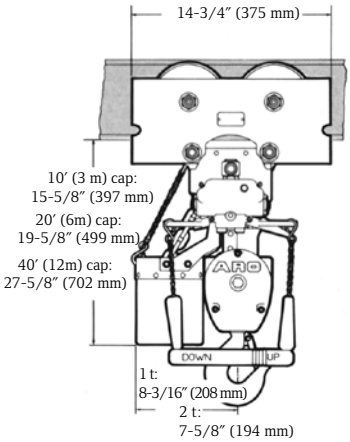

Motorized Trolley Mounted

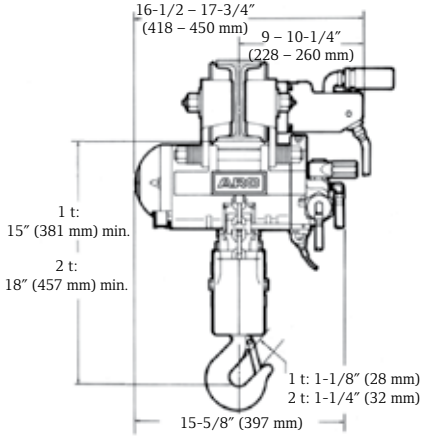

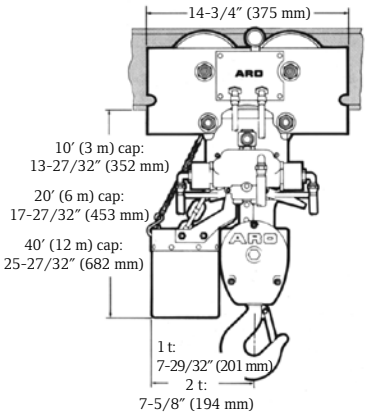

Note:
Headroom dimension for the 7790 Series 1-ton hoist increases 1.25″ for each Bullard hook used.
Headroom dimension for the 7790 Series 2-ton hoist increases 1.50″ for each Bullard hook used.

7700 Series and 7790 Series

0.125 to 2 metric ton lifting capacities

HOW TO ORDER

Specify complete model number as shown. This model code includes: Base Model - Control Option, Upper Suspension, Lift - Lower Suspension, Control Length, and Options.

Base –

Zinc plated steel link chain models:

7770E = 0.125 ton
7718E = 0.25 ton
7756E = 0.50 ton
7776E = 1 ton
7790A = 1 ton
7792A = 2 ton

Spark resistant stainless steel link chain models:

7712EL = 550 lb
7714EL = 1,500 lb
7796AL = 1,500 lb
7798AL = 2,400 lb
7790AL = 3,000 lb

Control Option

0 = No controls
1 = Pull chain
2 = Pendent control
3 = 2 motor pendent
4 = 3 motor pendent

Upper Suspension

A = Lug / adapter
C = Steel snap hook
E = Eye bolt (7740 only)
K = Bullard hook, manual close (3)
R = Bronze snap hook (2)
DA = Rigid RT or TIR push trolley A flange
DD = Rigid TIR push trolley D flange
FxxA = Hand geared trolley A flange
FxxD = Hand geared trolley D flange
HA = Powered trolley A flange
HD = Powered trolley D flange

Lift (feet) –

10 = Standard
XXX = Specify length

Lower Hook

C = Steel snap hook
K = Bullard hook, manual close (3)
G = Self latching hook (1) (3)
R = Bronze hook (2)

Lift (feet)

6 = Standard
XXX = Specify length

Options

P = Piped exhaust kit (1)
U = Canvas chain container
S = Steel chain container (1) (3)

NOTES:
(2) Standard on spark-resistant models
(3) Not available on spark-resistant models

Pricing example: 7712EL-3HA20 -R16U

Spark-resistant, 550 lb capacity, stainless link chain, 1 chain fall, 50 fpm lifting speed. Unit is specified with two motor pendent control, power trolley suspension (A flange), 20 ft of lift, bronze lower hook, 16 ft of pendent length and a canvas basket.

Electric Chain Hoists



Ingersoll Rand Quantum QCH Series electric chain hoists bring outstanding control, reliability, long life, and safety to your load handling operations. Available in both single and dual-speed options — as well as lifting capacities ranging from 0.125 to 5 ton — Quantum QCH Series hoists meet or exceed H3 duty-cycle standards for world-class performance. They are also the only hoist family UL and C-UL listed, with third-party evaluation limiting liability.

Quantum QCH Series hoists feature geared limit switches and pendents with e-stops as standard. They offer low-headroom profiles and are easily customized to your application.

Quantum Series

0.125 to 5 metric ton lifting capacities



Features

Smooth, quiet operation — Helical / spur gear combination provides smooth movement and quiet, reliable operation. A floating chain guide precisely feeds chain onto a machine-matched, five-pocket chain wheel. This system ensures smooth, jam-resistant operation.

Durability — Quantum load chains are precision-formed from alloy steel, case hardened and zinc-plated. The plating is an Ingersoll Rand proprietary process that resists corrosion better than any standard plating offered for load chain.

Reliability — With high starting torque, Quantum motors use a totally enclosed non-ventilated (TENV) squirrel cage design. Class F insulation provides a total thermal rating of 145°C at a 1.0 service factor, instead of the more common Class B insulation of 120° C.

Safety — State-of-the-art AC motor brakes with all-steel discs. Multiple stacking significantly increases braking surface area, reducing wear and extending life. Quantum brake discs are guaranteed for the life of the hoist. The overload clutch is factory-set to limit Quantum from lifting loads in excess of 150% of rated hoisting capacity.

Ergonomics — Safety-first pendent control handles are comfortable and fit securely in the operator's hand. Each low-voltage (42-volt) control handle integrates a large, red emergency stop button. Operating buttons are clearly marked with high contrast arrows, feature soft-push action, and are horizontally aligned for easier operation.

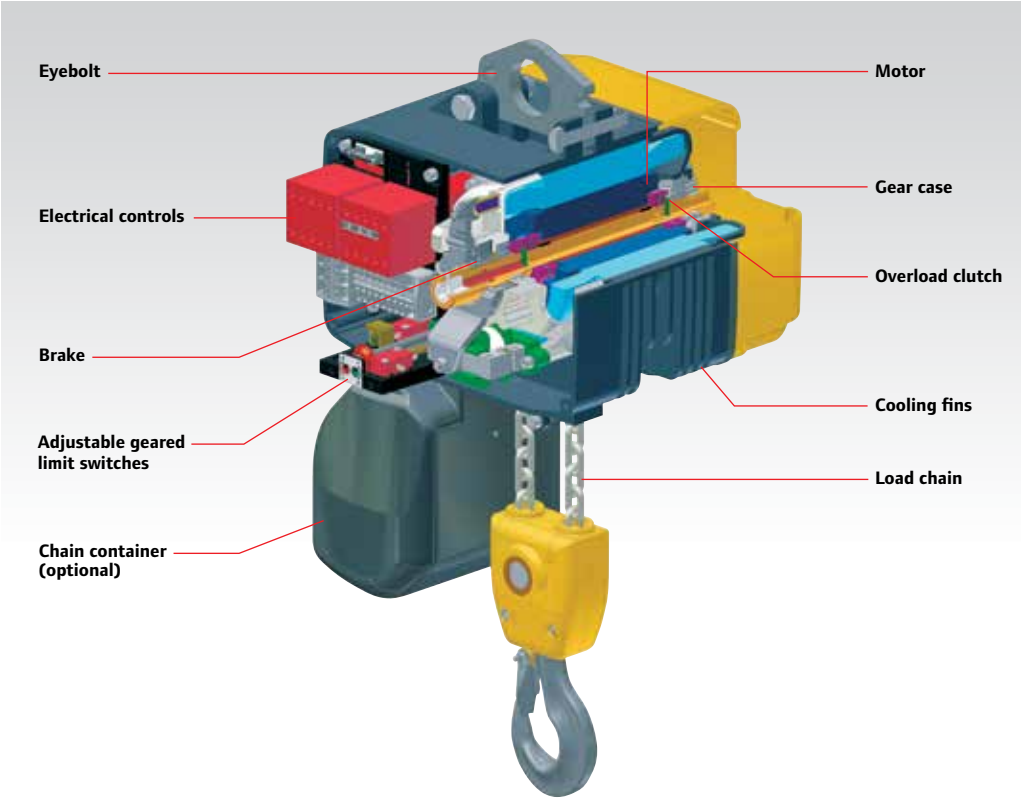

Quantum Series

0.125 to 5 metric ton lifting capacities

Quantum Series Specifications

Model	Capacity lb	Capacity metric tons	# Falls	Motor hp	Hook Mount Headroom in	Hook Mount Headroom mm	Trolley Mount Headroom in	Trolley Mount Headroom mm	Lifting Speed Rated Load or No Load ft/min	Lifting Speed Rated Load or No Load m/min	Lowering Speed Rated Load or No Load ft/min	Lowering Speed Rated Load or No Load m/min	Chain Weight (per foot of lift) lb	Chain Weight (per foot of lift) kg	Net Weight w/10 ft of lift lb	Net Weight w/10 ft of lift kg
THREE-PHASE (SINGLE SPEED)																
QCH50-1NS12	275	0.125	1	1	17.1	435	17.4	441.3	32	9.8	32	9.8	0.4	0.2	45	20.4
QCH50-1NS25	550	0.25	1	1	17.1	435	17.4	441.3	32	9.8	32	9.8	0.4	0.2	45	20.4
QCH50-1NS50	1,100	0.50	1	1	17.1	435	17.4	441.3	32	9.8	32	9.8	0.4	0.2	45	20.4
QCH50-2NS100	2,200	1	2	1	18.8	476.3	18.9	481	16	4.9	16	4.9	0.7	0.3	50	22.7
QCH100-1NS100	2,200	1	1	2.1	21.8	553.2	21.5	545.3	32	9.8	32	9.8	0.7	0.3	99	44.9
QCH100-2NS200	4,400	2	2	2.1	24.7	627.1	24.4	619.9	16	4.9	16	4.9	1.4	0.6	110	49.9
QCH300-1NS200	4,400	2	1	4.2	25.4	646.1	26.4	671.5	32	8	32	9.8	1.5	0.7	143	64.9
QCH200-2NS300	6,600	3	2	3.2	28.7	727.9	29.8	756.4	16	4.9	16	4.9	3	1.4	161	73
QCH300-2NS400	8,800	4	2	4.2	28.7	727.9	29.7	753.3	16	4.9	16	4.9	3	1.4	168	76.2
QCH500-2NS500	11,000	5	2	4.2	28.7	727.9	29.7	754.9	12.5	3.8	12.5	3.8	3	1.4	168	76.2
THREE-PHASE (DUAL SPEED)																
QCH50-1ND12	275	0.125	1	1	17.1	435	17.4	441.3	32 / 8	9.8 / 2.4	32 / 8	9.8 / 2.4	0.4	0.2	50	22.7
QCH50-1ND25	550	0.25	1	1	17.1	435	17.4	441.3	32 / 8	9.8 / 2.4	32 / 8	9.8 / 2.4	0.4	0.2	50	22.7
QCH50-1HD25	550	0.25	1	1	17.1	435	17.4	441.3	50 / 12	15.2 / 3.7	50 / 12	15.2 / 3.7	0.4	0.2	50	22.7
QCH50-1ND50	1,100	0.50	1	1	17.1	435	17.4	441.3	32 / 8	9.8 / 2.4	32 / 8	9.8 / 2.4	0.4	0.2	50	22.7
QCH50-2ND100	2,200	1	2	1	18.8	476.3	18.9	481	16 / 4	4.9 / 1.2	16 / 4	4.9 / 1.2	0.7	0.3	55	24.9
QCH100-1ND100	2,200	1	1	2.1	21.8	553.2	21.5	545.3	32 / 8	9.8 / 2.4	32 / 8	9.8 / 2.4	0.7	0.3	101	45.8
QCH100-2ND200	4,400	2	2	2.1	24.7	627.1	24.4	619.9	16 / 4	4.9 / 1.2	16 / 4	4.9 / 1.2	1.4	0.6	112	50.8
QCH300-1ND200	4,400	2	1	4.2	25.4	646.1	26.4	671.5	32 / 8	9.8 / 2.4	32 / 8	9.8 / 2.4	1.5	0.7	147	66.7
QCH200-2ND300	6,600	3	2	3.2	28.7	727.9	29.8	756.4	16 / 4	4.9 / 1.2	16 / 4	4.9 / 1.2	3	1.4	165	74.8
QCH300-2ND400	8,800	4	2	4.2	28.7	727.9	29.7	753.3	16 / 4	4.9 / 1.2	16 / 4	4.9 / 1.2	3	1.4	172	78
QCH500-2ND500	11,000	5	2	4.2	28.7	727.9	29.7	754.9	12.5 / 3	3.8 / 0.9	12.5 / 3	3.8 / 0.9	3	1.4	172	78



Eyebolt and hook suspension



Motorized trolley suspension



PT Series plain trolley with hook suspension

Quantum Series

0.125 to 5 metric ton lifting capacities

Handy Handle control — QCH50 models only

This ergonomically designed control enables precise operation at the hook and acts as a robotic power extension of the operator's arm. The load can be positioned and controlled with one hand, freeing the other to position the load.

The Handy Handle can be ordered separately as part of a kit, to convert any 0.125-, 0.25-, and 0.50-ton single-line Quantum hoist, or as an "H" control option on a new hoist. Each Handy Handle comes standard with single- or dual-speed thumb control lever switches and red emergency stop button. A socket connection at the bottom allows the standard hook to be easily replaced by custom-end effectors or grabs.



Quantum Series Motorized Trolley Specifications – M1, M2, and M4

Model	Traverse Speed ft/min (m/min)			Amperage			Min. in (mm)	Min. in (mm)	Flange Width in (mm)				Weight
	M1	M2	M4	230V	460V	575V	Beam Height	Curve Radius	A	B	C	D	lb (kg)
QCH50-1NS12	48 (14.6)	48/16 (14.6/4.9)	72/24 (21.9/7.3)	1.5	0.75	0.6	4 (101.6)	48 (1219.2)	2.0 - 3.9 (50.8 - 99.1)	4.0 - 5.9 (101.6 - 149.9)	6.0 - 7.8 (152.4 - 198.1)	7.9 - 9.4 (200.7 - 238.8)	60 (27.2)
QCH50-1ND12													
QCH50-1NS25													
QCH50-1ND25													
QCH50-1NS50													
QCH50-1ND50													
QCH50-2NS100													
QCH50-2ND100													
QCH100-1NS100							6 (152.4)	60 (1524.0)	3.0 - 5.5 (76.2 - 139.7)	5.6 - 7.8 (142.2 - 198.1)	7.9 - 10.2 (200.7 - 259.1)	10.3 - 12.6 (261.6 - 320.0)	70 (31.7)
QCH100-1ND100													
QCH100-2NS200													
QCH100-2ND200													
QCH300-1NS200							6 (152.4)	72 (1828.8)	2.2 - 4.7 (55.9 - 119.4)	4.8 - 7.0 (121.9 - 177.8)	7.1 - 9.4 (180.3 - 238.8)	9.5 - 11.8 (241.3 - 299.7)	110 (49.9)
QCH300-1ND200													
QCH200-2NS300													
QCH200-2ND300													
QCH300-2NS400													
QCH300-2ND400													
QCH500-2NS500				3	1.5	1.2							
QCH500-2ND500													

Quantum Series

0.125 to 5 metric ton lifting capacities

Quantum Series Dimensions

QCH Base Model	Capacity lb	Capacity Metric Tons	Falls	Headroom Eyebolt (AE) in	Eyebolt (AE) mm	Hook (AH) in	Hook (AH) mm	Push Trolley (AP) in	Push Trolley (AP) mm	Motor Trolley (AM) in	Motor Trolley (AM) mm	Hook (B) in	Hook (B) mm	Hook (C) in	Hook (C) mm
THREE PHASE (SINGLE SPEED)															
QCH50-1NS12	275	0.125	1	14.8	375.9	17.1	434.3	17.4	442	16.8	426.7	0.9	22.9	1	25.4
QCH50-1NS25	550	0.25	1	14.8	375.9	17.1	434.3	17.4	442	16.8	426.7	0.9	22.9	1	25.4
QCH50-1NS50	1,100	0.50	1	14.8	375.9	17.1	434.3	17.4	442	16.8	426.7	0.9	22.9	1	25.4
QCH50-2NS100	2,200	1	2	16.4	416.6	18.8	477.5	18.9	480.1	18.3	464.8	0.9	22.9	1	25.4
QCH100-1NS100	2,200	1	1	19	482.6	21.8	553.7	21.5	546.1	21.3	541	1	25.4	1.3	33
QCH100-2NS200	4,400	2	2	21.9	556.3	24.7	627.4	24.4	619.8	24.3	617.2	1	25.4	1.3	33
QCH300-1NS200	4,400	2	1	23.9	607.1	25.4	645.2	26.4	670.6	26.2	665.5	1.5	38.1	1.6	40.6
QCH200-2NS300	6,600	3	2	27.2	690.9	28.7	729	29.8	756.9	29.3	744.2	1.5	38.1	1.6	40.6
QCH300-2NS400	8,800	4	2	27.2	690.9	28.7	729	29.7	754.4	29.3	744.2	1.5	38.1	1.6	40.6
QCH500-2NS500	11,000	5	2	27.2	690.9	28.7	729	29.7	754.4	29.3	744.2	1.5	38.1	1.6	40.6
THREE PHASE (DUAL SPEED)															
QCH50-1ND12	275	0.125	1	14.8	375.9	17.1	434.3	17.4	442	16.8	426.7	0.9	22.9	1	25.4
QCH50-1ND25	550	0.25	1	14.8	375.9	17.1	434.3	17.4	442	16.8	426.7	0.9	22.9	1	25.4
QCH50-1HD25	550	0.25	1	14.8	375.9	17.1	434.3	17.4	442	16.8	426.7	0.9	22.9	1	25.4
QCH50-1ND50	1,100	0.50	1	14.8	375.9	17.1	434.3	17.4	442	16.8	426.7	0.9	22.9	1	25.4
QCH50-2ND100	2,200	1	2	16.4	416.6	18.8	477.5	18.9	480.1	18.3	464.8	0.9	22.9	1	25.4
QCH100-1ND100	2,200	1	1	19	482.6	21.8	553.7	21.5	546.1	21.3	541	1	25.4	1.3	33
QCH100-2ND200	4,400	2	2	21.9	556.3	24.7	627.4	24.4	619.8	24.3	617.2	1	25.4	1.3	33
QCH300-1ND200	4,400	2	1	23.9	607.1	25.4	645.2	26.4	670.6	26.2	665.5	1.5	38.1	1.6	40.6
QCH200-2ND300	6,600	3	2	27.2	690.9	28.7	729	29.8	756.9	29.3	744.2	1.5	38.1	1.6	40.6
QCH300-2ND400	8,800	4	2	27.2	690.9	28.7	729	29.7	754.4	29.3	744.2	1.5	38.1	1.6	40.6
QCH500-2ND500	11,000	5	2	27.2	690.9	28.7	729	29.7	754.4	29.3	744.2	1.5	38.1	1.6	40.6

Quantum Series Weight

QCH Base Model	Eyebolt or Hook lb	Eyebolt or Hook kg	Push Trolley lb	Push Trolley kg	Motor Trolley lb	Motor Trolley kg
THREE PHASE (SINGLE SPEED)						
QCH50-1NS12	45	20.4	65	29.5	105	47.6
QCH50-1NS25	45	20.4	65	29.5	105	47.6
QCH50-1NS50	45	20.4	65	29.5	105	47.6
QCH50-2NS100	50	22.7	80	36.3	110	49.9
QCH100-1NS100	99	44.9	129	58.5	173	78.5
QCH100-2NS200	110	49.9	165	74.8	184	83.4
QCH300-1NS200	143	64.9	198	89.8	257	116.6
QCH200-2NS300	161	73	236	107	281	127.4
QCH300-2NS400	168	76.2	274	124.3	282	127.9
QCH500-2NS500	168	76.2	274	124.3	282	127.9
THREE PHASE (DUAL SPEED)						
QCH50-1ND12	50	22.7	70	31.7	110	49.9
QCH50-1ND25	50	22.7	70	31.7	110	49.9
QCH50-1HD25	50	22.7	70	31.7	110	49.9
QCH50-1ND50	50	22.7	70	31.7	110	49.9
QCH50-2ND100	55	24.9	85	38.5	115	52.2
QCH100-1ND100	101	45.8	131	59.4	175	79.4
QCH100-2ND200	112	50.8	167	75.7	186	84.4
QCH300-1ND200	147	66.7	202	91.6	261	118.4
QCH200-2ND300	165	74.8	240	108.8	285	129.3
QCH300-2ND400	172	78.0	278	126.1	286	129.7
QCH500-2ND500	172	78.0	278	126.1	286	129.7

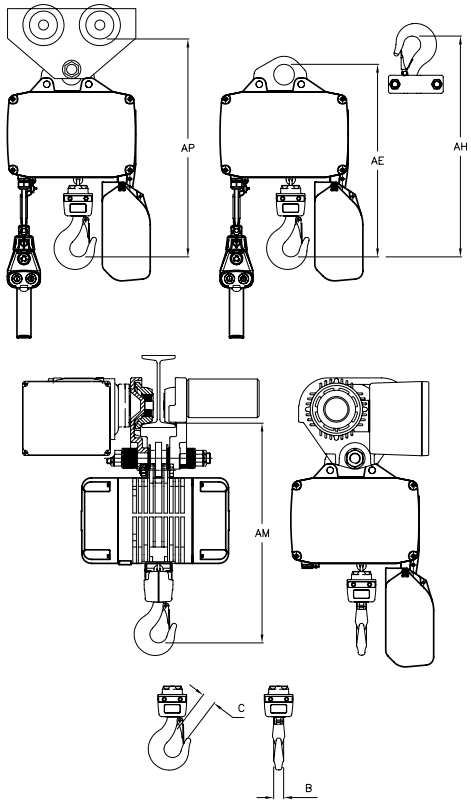

Quantum Series

0.125 to 5 metric ton lifting capacities

HOW TO ORDER

Example: QCH100-2NS200M1-21-17B4C

QCH100-2NS200 M1 – 21 – 17 B 4 C

Base model

3 phase single speed

QCH50-1NS12
QCH50-1NS25
QCH50-1NS50
QCH50-2NS100
QCH100-1NS100
QCH100-2NS200
QCH300-1NS200
QCH200-2NS300
QCH300-2NS400
QCH500-2NS500

3 phase dual-speed

QCH50-1ND12
QCH50-1ND25
QCH50-1HD25
QCH50-1ND50
QCH50-2ND100
QCH100-1ND100
QCH100-2ND200
QCH300-1ND200
QCH200-2ND300
QCH300-2ND400
QCH500-2ND500

Suspension type

E = Eye bolt
H = Hook
P = Plain trolley ("PT" Series)
M1 = Motorized trolley (normal speed 48 fpm)
M2 = Motorized trolley (normal/dual speed 48/16 fpm)
M4 = Motorized trolley (high/dual speed 96/24 fpm)

Lift (feet)

10 = Standard
15 = Standard
20 = Standard
XX = Specify length

Pendent drop (feet)

6 = Standard
11 = Standard
16 = Standard
XX = Specify length

Flange width

(See catalog for specifications)
- = Eye bolt or hook mount
A = See flange width chart
B = See flange width chart
C = See flange width chart
D = See flange width chart

Voltage

3 = 230/3/60
4 = 460/4/60
5 = 575/3/60
6 = 380/3/50*
(* = these units have extended lead times and are not UL or C-UL (Canadian UL) listed)

Options

B = Trolley brake
C = Chain container
E = External strain relief
F = XX, specify power cord length (standard is 15 ft on E, H, and P, and 3 ft on M1-M4 suspensions)
H = Handy Handle (QCH50 single fall only)
K = 110 volt control (3 phase models only)
P = Pendent with vertical aligned buttons
P2 = Pendent with 2 extra vertical aligned buttons
P4 = Pendent with 4 extra vertical aligned buttons
Y = Bullard top hook
Z = Bullard bottom hook

ULE2 Ultra-Lo Series

0.25 to 24 ton lifting capacity



Features

The complete line of low-headroom Ingersoll Rand worm-gear-driven electric and air hoists provides smooth, quiet, trouble-free operation. All models are tested in accordance with ANSI B30.16 overhead hoist standards.

- Large-diameter chain wheels for improved chain wear
- Worm gear drive for maximum control and durability
- Plain, motorized, and hand chain trolleys
- Dual up and down limits for added safety
- NEMA-12 enclosure for weather-resistant pendent controls
- Design flexibility allows custom configurations to be offered and priced on request
- Dual- and self-braking worm drive and spring-applied motor brake
- Explosion-proof units and spark- and corrosion-resistant features can be customized to fit applications and priced on request
- Quick response time to quotes and reduced lead time on delivery

ULE2 Electric Series Specifications

	Capacity			Motor	Trolley Mount Headroom		Lifting Speed Rated Load or No Load		Lowering Speed Rated Load or No Load		Net Weight Plain Trolley		Net Weight Geared Trolley		Net Weight Motorized Trolley	
Model	lb	U.S. tons	# Falls	hp	in	mm	ft/min	m/min	ft/min	m/min	lb	kg	lb	kg	lb	kg
ULE2_010-8-6	2,000	1	N/A	2	7	177.8	10	3.1	10	3.1	440	199.5	470	213.2	480	217.7
ULE2_015-8-6	3,000	1.5	N/A	2	7	177.8	10	3.1	10	3.1	440	199.5	470	213.2	480	217.7
ULE2_020-8-6	4,000	2	N/A	2	7	177.8	10	3.1	10	3.1	440	199.5	470	213.2	480	217.7
ULE2_030-8-6	6,000	3	N/A	2	8	203.2	5	1.5	5	1.5	540	244.9	570	258.5	580	263
ULE2_040-8-6	8,000	4	N/A	2	8.5	215.9	5	1.5	5	1.5	540	244.9	570	258.5	580	263
ULE2_050-8-6	10,000	5	N/A	4	9.5	241.3	7	2.1	7	2.1	1,280	580.5	1,340	607.7	1,310	594.1
ULE2_060-8-6	12,000	6	N/A	4	9.5	241.3	7	2.1	7	2.1	1,280	580.5	1,340	607.7	1,310	594.1
ULE2_080-8-6	16,000	8	N/A	4	12	304.8	4	1.2	4	1.2	1,350	612.2	1,480	671.2	1,400	634.9
ULE2_100-8-6	20,000	10	N/A	4	12.5	317.5	3.5	1.1	3.5	1.1	1,730	784.6	1,810	820.9	1,780	807.3
ELE2_120-8-6*	24,000	12	N/A	4	12.5	317.5	3.5	1.1	3.5	1.1	1,730	784.6	1,810	820.9	1,780	807.3
ULE2_160-8-6*	32,000	16	N/A	4	14.5	368.3	2	0.6	2	0.6	2,300	1043.1	2,380	1079.4	2,350	1065.8
ULE2_200-8-6*	40,000	20	N/A	4	18	457.2	1.7	0.5	1.7	0.5	2,650	1201.8	2,810	1274.4	2,750	1247.2
ULE2_240-8-6*	48,000	24	N/A	4	18	457.2	1.7	0.5	1.7	0.5	2,650	1201.8	2,810	1274.4	2,750	1247.2

Notes:
Standard lift is 10 ft.
** For over 10 U.S. ton capacity, straight track operation is recommended.*
Curved radius must be specified on orders, since wheels must be modified to negotiate curves.
Curves less than minimum radius may be fitted upon application. Consult Customer Service for further information.
ULA2 air hoist specifications and dimensions are similar. Consult Customer Service if accurate data is required.

ULE2 Ultra-Lo Series

0.25 to 24 ton lifting capacity

ULE2 Series Dimensions†

Model	A in	B in	C in	D in	E in	E1 in	F in	G in	H in	J in	L in	M in	N in	P* in	R in	S in	T** in
ULE2_010-8-6	7	33	16.5	16.5	7.8	7.8	12	10	0.6	1.1	1.1	4.5	0.9	S6X12.5	6	6	9.3
ULE2_015-8-6	7	33	16.5	16.5	7.8	7.8	12	10	0.6	1.1	1.1	4.5	0.9	S6X12.5	6	6	9.3
ULE2_020-8-6	7	33	16.5	16.5	7.8	7.8	12	10	0.6	1.1	1.1	4.5	0.9	S6X12.5	6	6	9.3
ULE2_030-8-6	8	33	16.5	16.5	9	9	14	13	0.6	1.3	1.3	6.4	1	S8X18.4	6	8	5.5
ULE2_040-8-6	8.5	33	16.5	16.5	9	9	14	13	0.6	1.7	1.3	6.4	1	S8X18.4	6	8	5.5
ULE2_050-8-6	9.5	50.5	23.5	24.9	7.4	7.4	12	15	0.9	1.7	1.4	7.2	0.9	S10X25.4	6	9	12
ULE2_060-8-6	9.5	50.5	23.5	24.9	7.4	7.4	12	15	0.9	1.7	1.4	7.2	0.9	S10X25.4	6	9	12
ULE2_080-8-6	12	50.5	23.5	24.9	8.4	8.9	14	13.5	0.6	2.1	1.7	8.3	1.1	S10X25.4	6	10	12
ULE2_100-8-6	12.5	50.5	23.5	24.9	8.5	9.8	15.6	14.4	0.6	2.3	1.8	9.8	0.9	S12X31.8	6	11.7	10
ULE2_120-8-6	12.5	50.5	23.5	24.9	8.5	9.8	15.6	14.4	0.6	2.3	1.8	9.8	0.9	S12X31.8	6	11.7	10
ULE2_160-8-6	14.5	54.5	25.5	26.9	11.9	11.9	18.6	18.6	0.6	3	2	11.8	1	S15X42.9	6	13.5	3.5
ULE2_200-8-6	18	54.5	25.5	26.9	12.1	12.4	19.3	19	0.8	3.6	2	11.8	1	S18X54.7	6	13.5	2.5
ULE2_240-8-6	18	54.5	25.5	26.9	12.1	12.4	19.3	19	0.8	3.6	2	11.8	1	S18X54.7	6	13.5	2.5

Notes:

†ULA2 air hoist specifications and dimensions are similar. Consult Customer Service for further information.

**Minimum standard I-beam for proper wheel running clearance. Contact factory for smaller beams. Customer must verify beam is adequate for applied loads.*

***For standard motor and brake only.*

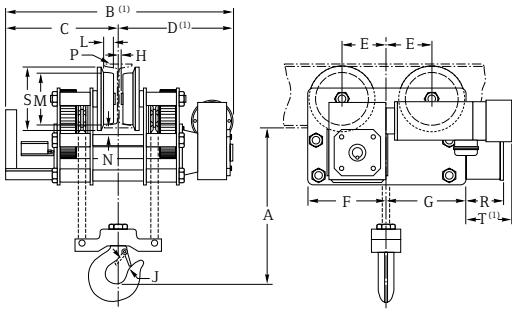

HOW TO ORDER

Example: ULE2-MT-010-10-6TW

ULE2 – MT – 010 – 10 – 6 TW

Base model
ULA2 = Air
ULE2 = Electric

Trolley options
PT = Plain tapered
PF = Plain flat
MT = Motorized tapered
MF = Motorized flat
GT = Geared tapered
GF = Geared flat

Capacity

010 =	909 kg	= 2,000 lb
015 =	1364 kg	= 3,000 lb
020 =	1818 kg	= 4,000 lb
030 =	2727 kg	= 6,000 lb
040 =	3636 kg	= 8,000 lb
050 =	4545 kg	= 10,000 lb
060 =	5455 kg	= 12,000 lb
080 =	7273 kg	= 16,000 lb
100 =	9091 kg	= 20,000 lb
120 =	10909 kg	= 24,000 lb
160 =	14545 kg	= 32,000 lb
200 =	18182 kg	= 40,000 lb
240 =	21818 kg	= 48,000 lb

Lift (ft)
10 = 10 ft (standard)
XX = Specify length

Pendent drop
6 = 6 ft (standard)
XX = Specify length

Options
C = Chain container
X = Electric mainline power interrupt and pendent buttons
W = Electric (NEMA 4) watertight control box, limit switches and pendent
T = Electric thermal overload relays — each single speed motor
L = Electric fused control per leg of transformer secondary
E = Electric motor fuses — single speed hoist
F = Electric motor fuses — single speed hoist and trolley

NOTES:

S*COR*E options and marine finish are available.
Consult factory for flange widths over - 6″ up to 1 t - 6.625″ up to 1.50 and 2 t 7.25″ on 3 and 4 t - 8.25″ on 5 to 12 t.
Ultra-Lo hoists are not adjustable for varying beam sizes.
Beam type, size, height, width and curve radius required for all orders.
Customer to verify their beam is adequate for loads applied.

Trolleys and Beam Clamps



Ingersoll Rand offers a wide variety of plain, geared, or powered trolleys for use with all Ingersoll Rand hoists. We also offer the MTK air-powered tractor to push and pull a trolley-mounted hoist or other suspended or supported rolling load. Ingersoll Rand trolleys are available in either hook-on or rigid-mount styles.

For maximum convenience and lifting system integrity, we recommended ordering the trolley at the same time as the hoist by using the appropriate model-driver suspension code. Information relating to the various trolleys and MTK Series tractor can be found on the following pages.

Trolley selection guide

0.50 to 20 metric ton lifting capacities

The chart below cross-references all air chain hoist models and sizes with recommended trolleys. Always follow safe installation and operating procedures with any overhead system. Please call an authorized Ingersoll Rand distributor or representative for assistance with application and selection.

Hoist / Trolley Selection Guide

For Use With Hoist Series	Plain Hook-on	Plain Rigid	Geared Hook-on	Geared Rigid	Motorized Rigid
STANDARD TROLLEYS (SUSPENSION CODE)*					
ML250 / 500K / KS	PT005-8	RT010S-P00AN	GT010-8-10	RT010S-G08AN	RT010S-307AN
ML1000K / S	PT010-8	RT010S-P00AM	GT010-8-10	RT010S-G08AM	RT010S-307AM
ML250KR	PT005-8SB	RT010B-P00AN	GT010-8-10SB	RT010S-G08AN	RT010S-307AN
ML500KR	PT005-8SB	RT010B-P00AM	GT010-8-10SB	RT010S-G08AM	RT010S-307AM
HL1000K	PT010-8	TIR6600S-P00AJ	GT010-8-10	TIR6600S-G08AJ	TIR6600S-307AJ
HL1000KR	PT010-8SB	TIR6600B-P00AJ	GT010-8-10SB	TIR6600B-G08AJ	TIR6600B-307AJ
HL1500K	PT020-8	TIR6600S-P00AJ	GT020-8-10	TIR6600S-G08AJ	TIR6600S-307AJ
HL2000K	PT020-8	TIR6600S-P00AK	GT020-8-10	TIR6600S-G08AK	TIR6600S-307AK
HL3000K	PT030-8	TRI6600S-P00AK	GT030-8-10	TIR6600S-G08AK	TIR6600S-307AK
HL4500K	PT050-8	TIR132S-P00AP	GT050-8-10	TIR132S-G08AP	TIR132S-307AP
HL6000K	TIR132S-P00H	TIR132S-P00AP	GT050-8-10	TRI132S-G08AP	TIR132S-307AP
7700 Series <1 ton	PT005-8	RT010S-P00AR	GT010-8-10	RT010S-G08AR	RT010S-307AR
7700 Series 1 ton	PT010-8	RT010S-P00AR	GT010-8-10	RT010S-G08AR	RT010S-307AR
7790 Series 1 ton	PT010-8	TIR6600S-P00AA	GT010-8-10	TIR6600S-G08AA	TIR6600S-307AA
7792 Series	PT020-8	TIR6600S-P00AA	GT020-8-10	TIR6600S-G08AA	TIR6600S-307AA
7700 Series Spark Resistant	PT005-8SB	RT010B-P00AR	GT010-8-10SB	RT010S-G08AR	RT010S-307AR
7796AL Spark Resistant	PT010-8SB	TIR6600B-P00AA	GT010-8-10SB	TIR6600B-G08AA	TIR6600B-307AA
7798AL / 7799AL Spark Resistant	PT020-8SB	TIR6600B-P00AA	GT020-8-10SB	TIR6600B-G08AA	TIR6600B-307AA
Quantum QCH50-1	PT005-8	N/A	GT010-8-10	N/A	QMT50
Quantum QCH50-2	PT010-8	N/A	GT010-8-10	N/A	QMT50
Quantum QCH100-1	PT010-8	N/A	GT010-8-10	N/A	QMT150
Quantum QCH100-2	PT020-8	N/A	GT020-8-10	N/A	QMT150
Quantum QCH200-2	PT030-8	N/A	GT030-8-10	N/A	QMT300
Quantum QCH300-1	PT020-8	N/A	GT020-8-10	N/A	QMT300
Quantum QCH300-2	PT050-8	N/A	GT050-8-10	N/A	QMT300
Quantum QCH500-2	PT050-8	N/A	GT050-8-10	N/A	QMT300

PT Series



TIR Series



RT Series



GT Series



TIR Series



PT and GT Series trolley

0.50 to 20 metric ton capacities



PT010-8



GT020-8-10



GT100-12-10

Features

PT plain and GT hand-geared hook-on style trolley rated for manual or powered hoists having the versatility to fit most types of beams with compatibility to all hoist brands.

- The 5:1 design factor allows use with both manual or powered hoists. Meets pertinent U.S. (ASME/ANSI and CMAA), Canadian and European standards
- The side plates, including the rail sweeps/drop stops, are made of cold-formed steel for strength, durability, and even load distribution
- The wheels are cast iron and the universal tread fits either flat or tapered beams
- Wheels run on sealed, "Lube-for-Life" ball bearings. Smoother rolling with less effort and maintenance
- Additional gearing in the 20-ton trolley allows operation by one hand chain
- Painted black for coordination with hoists of all colors

Options

- FDA-approved nickel composite plated finish for corrosion resistance — available on PT005 and PT010 only
- Solid bronze alloy wheels for maximum spark resistance
- Wider hanger shaft capabilities allow standard trolleys to fit almost any S-beam or patented track beam, extension shaft kits are stocked

PT and GT Series Hook-on Trolley Specifications

Model	Capacity lb	Capacity metric tons	Flange Adjustment in	Min. Beam Height in	Min. Curve Radius in	Weight lb	Wide Flange Kit no. (order separate)	Flange Adjustment in	Weight lb
STANDARD SERIES									
PT005-8	1,100	0.50	2.6 - 8	4	36	19.7	PT005-WFK	8 - 13	5.5
PT010-8	2,200	1	3 - 8	5	36	30.7	PT010-WFK	8 - 13	9.5
PT020-8	4,400	2	3.3 - 8	6	48	60.5	PT020-WFK	8 - 13	10
PT030-8	6,600	3	3.9 - 8	7	42	73.2	PT030-WFK	8 - 13	16.3
PT050-8	11,000	5	4.6 - 8	8	60	110.3	PT050-WFK	8 - 13	24.8
PT100-12	22,000	10	7 - 13	10	83	205	NA	NA	NA
GT010-8-10	2,200	1	3 - 8	5	36	43.7	PT010-WFK	8 - 13	9.5
GT020-8-10	4,400	2	3.3 - 8	6	48	73.5	PT020-WFK	8 - 13	10
GT030-8-10	6,600	3	3.9 - 8	7	42	86.2	PT030-WFK	8 - 13	16.3
GT-050-8-10	11,000	5	4.6 - 8	8	60	123.3	PT050-WFK	8 - 13	24.8
GT100-12-10	22,000	10	7 - 13	10	83	227	NA	NA	NA
GT200-12	44,000	20	7 - 13	12	138	540	NA	NA	NA

HOW TO ORDER

Example: GT010-8-SB

GT | **010** | - | **8** | - | **SB**

Series

GT = Hand-geared hook-on

PT = Push hook-on

Capacity

GT Series		PT Series	
010	= 1 metric ton	005	= 0.5 metric tons
020	= 2 metric tons	010	= 1 metric ton
030	= 3 metric tons	020	= 2 metric tons
050	= 5 metric tons	030	= 3 metric tons
100	= 10 metric tons	050	= 5 metric tons
200	= 20 metric tons	100	= 10 metric tons

Hand chain drop

GT Series only

Feet

Options

NC = Nickel-plated trolley (available on PT Series 0.5 and 1 ton models only)

SB = Bronze wheels

PT and GT Series trolley

0.50 to 20 metric ton capacities

PT and GT Series Hook-on Trolley Dimensions (in)

Model	A	A(-8)	B	C	D	E	F	G	H	J	K	L	M	N	P	P(-8)	R	S	T
STANDARD SERIES																			
PT005-8	2.6	5.9	10	4.5	1	4	1.1	3.5	2.1	0.8	.1	6.6	–	3.9	–	12.3	1.3	1.6	–
PT010-8	2.5	5.9	13	5.2	1.3	4.4	1.6	4.2	2.8	0.8	1	6.9	–	4.3	–	12.9	1.5	1.6	–
PT020-8	2.6	6.1	14.6	6.8	1.3	5.3	1.3	5.8	4.3	1.1	1.2	7.5	-	4.3	-	13.8	1.5	1.6	-
PT030-8	2.6	7.9	14	6.4	1.6	5.5	1.6	5.8	4.5	1.1	1.4	8.6	-	5.4	-	14.1	1.9	2.6	-
PT050-8	2.8	8.1	15.5	7.1	1.6	5.8	2.2	6.2	4.5	1.6	1.4	9.8	-	6.6	-	15.6	2.5	2.6	-
PT100-12	11.8	-	17.9	19.3	20.8	5	7.9	2	7.4	5.9	4.2	1.8	3.2	17.1	3.7	-	1	-	-
GT010-8-10	2.5	5.9	13	5.2	1.3	4.4	1.6	4.2	2.8	0.8	1	6.9	-	4.3	-	12.9	1.5	1.6	7.8
GT020-8-10	2.6	6.1	14.9	6.8	1.3	5.3	1.3	5.8	4.3	1.1	1.2	7.5	-	4.3	-	13.8	1.5	1.6	7.8
GT030-8-10	2.6	7.9	14	6.4	1.6	5.5	1.6	5.8	4.5	1.1	1.4	8.6	-	5.4	-	14.1	1.9	2.6	8.1
GT050-8-10	2.8	8.1	15.5	7.1	1.6	5.8	2.2	6.2	4.5	1.6	1.4	9.8	-	6.6	-	15.6	2.5	2.6	8.5
GT100-12-10	11.8	–	17.9	19.3	20.8	5	7.9	2	7.4	5.9	4.2	1.8	3.2	17.1	3.7	–	1	–	–
GT200-12-10	10.5	–	25.3	24.5	22.5	6.7	11.8	2.6	10.8	7.9	5.9	2.8	4.3	18	4.5	–	4.9	–	–

PT Trolley Adapters

Stationary

Adapter comes with any 7700 Series hoist ordered as a trolley-suspended model. Adapter can be ordered separately to convert existing hook-suspended 7700 Series hoists for stationary mounting to a PT Series trolley. Order 47717 (shown) for 0.25- and 0.50-ton models; 47716 for 1-ton models. Spacer kits are required. Refer to the price list for details.

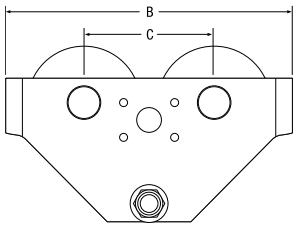

PT010 - PT050
plain trolley/without tag

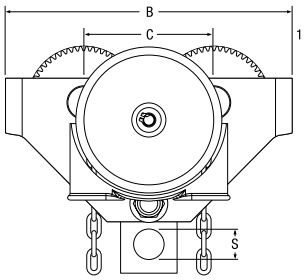

GT010 - GT050
geared trolley

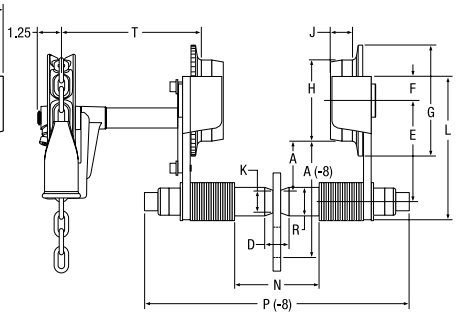

PT010 - PT050 and GT010 - GT050
plain and geared trolley

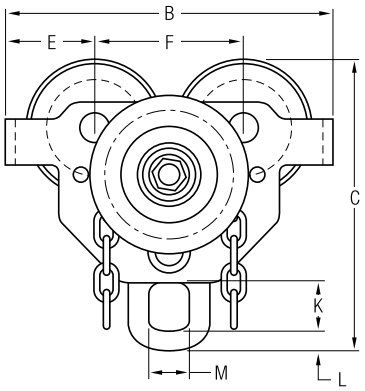

GT100
geared trolley

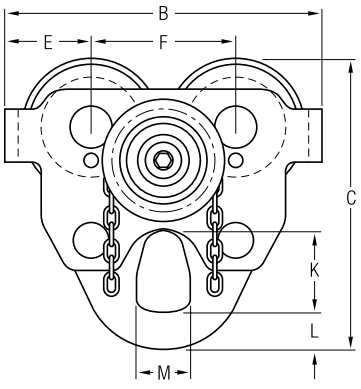

GT200
geared trolley

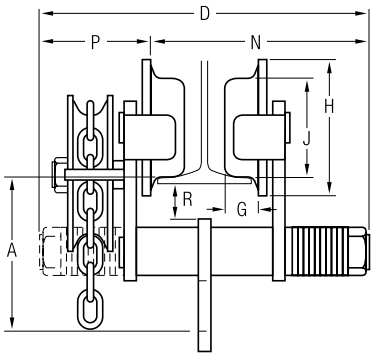

GT100 and GT200
geared trolley

TIR Series

0.25 to 6 metric ton capacities

Features

TIR Series trolleys are supplied as standard equipment for MLK Series, and HLK Series hoists when specified. The TIR trolley may also be used as a hook-on trolley with any hoist.

- Meets ANSI B30.16 for hoisting requirements — 5:1 minimum safety factor
- All-steel construction
- Universal wheels fit both flat and tapered beam flanges
- Rail sweeps are integral with the side plates
- Cast-iron wheels roll easily on permanently greased sealed bearings
- 7′ pendent control or 8′ hand chain length — other lengths available
- Tight turning radius
- Standard 3-ton trolley fits 3.25″ – 6″ flange width, 6-ton fits 4.25″ – 7.25″
- Modular trolley frame allows hook-on, plain rigid, geared, and motorized configurations in the field
- Motorized trolley has automatic disc brake
- Low air consumption at only 35 scfm on motorized versions

Options

- Solid bronze wheels for maximum spark resistance
- Wide flange kit for 3-ton fits 6″ – 12″
- Hook-on adapters
- Lug adapters for rigid-mounting Ingersoll Rand hoist

TIR Series Trolley Specifications

Trolley Type	Capacity		Min. Curve Radius	Standard Flange Adj.	Hand Chain/Pendent Drop	Trolley Weight
	lb	metric tons	in	in	ft	lb
TIR6600 TROLLEY SERIES						
Plain hook-on	550 - 6,600	0.25 - 3	42	3.3 - 6	N/A	31
Plain rigid	550 - 6,600	0.25 - 3	42	3.3 - 6	N/A	34
Geared hook-on	550 - 6,600	0.25 - 3	42	3.3 - 6	7	34
Geared rigid	550 - 6,600	0.25 - 3	42	3.3 - 6	7	37
Motorized	550 - 6,600	0.25 - 3	42	3.3 - 6	7	35
Plain	550 - 6,600	0.25 - 3	42	3.3 - 6	N/A	25
TIR132 TROLLEY SERIES						
Plain hook-on	9,900 - 13,200	4.5 - 6	60	4.3 - 7.3	N/A	154
Plain rigid	9,900 - 13,200	4.5 - 6	60	4.3 - 7.3	N/A	150
Geared hook-on	9,900 - 13,200	4.5 - 6	60	4.3 - 7.3	7	157
Geared rigid	9,900 - 13,200	4.5 - 6	60	4.3 - 7.3	7	153
Motorized	9,900 - 13,200	4.5 - 6	60	4.3 - 7.3	7	155



TIR6600 plain trolley



TIR6600 motorized trolley

TIR Series

0.25 to 6 metric ton capacities

TIR Series Flange and Adapters Kits

Flange Kits	Flange Width (in)	Part Number
Standard	3.3 – 6	49558
Wide	6 – 12	49559
Adapter Kits	**Option Code**	**Part Number**
Hook-on	H	TIR-426
90° Trolley Adapter*		43111

**Used to mount any 7790 Series hoist parallel to suspension beam. Adapter increases headroom dimension by 1.625 inches.*

Motorized Trolley Specifications

Hoist Capacity lb	Hoist Capacity metric tons	Trolley Speed On Beam* fpm
550	0.25	95
1,100	0.50	93
2,200	1	88
3,300	1.50	84
4,400	2	80
6,600	3	71
9,900	4.50	60
12,000	6	45

Note:
**Beam in good condition.*

HOW TO ORDER

Example: TIR6600S-G08DP

TIR 6600 S - G 08 D P

Series
TIR
RT

Capacity
6600 = 6,600 lb/ 3 ton
132 = Standard
010 = 2,200 lb/ 1 ton

Standard or S*COR*E
S = Standard cast iron wheels
B = Standard bronze wheels for S*COR*E features

Type
P = Plain trolley(1)
G = Hand chain gear driven
0 = Vane motor air driven, no pendent
2 = Vane motor air driven, 1 motor pendent(2)
3 = Vane motor air driven, 2 motor pendent(2)
4 = Vane motor air driven, 3 motor pendent(2)

Chain or pendent length
07 = 7 ft (standard for pendent)
08 = 8 ft (standard for hand chain)
XX = Specify length in feet
00 = No pendent or hand chain or a plain trolley

Flange width (in)
A = Fits 3 ton (3.3 - 6) 6 ton (4.3 - 7.3)
D = Fits 3 ton (6 - 12) 6 ton (N/A)

Suspension type
P = Plain (without lug)(1)
A = 7790 plain, no adapter
E = 7700 0.25-1 ton to TIR6600 adapter
J = HLK 1 and 1.5 ton lug adapter(1)
K = HLK 2 and 3 ton lug adapter(1)
H = Hook adapter (3 and ton TIR6600 only)
M = MLK to TIR6600 lug adapter (TIR6600 only)
R = 7700 0.25-1 ton to RT adapter
T = RT rigid lug adapter

NOTE:

(1) Required to install TIR6600 trolley on HLK1-3t hoist with top lug manufactured July 1995 or before, or to convert any hook mount to rigid trolley.

(2) Standard pendents are full flow for the TIR trolley. Pilot and full flow for the second and third function. If control length exceeds 20 ft, quick exhaust valves are required. See table and associated pricing, as with the MTK tractor.

TIR Series

0.25 to 6 metric ton capacities

TIR6600, TIR132, and RT010 dimensions

TIR6600 plain, geared, and lug-mounted trolley

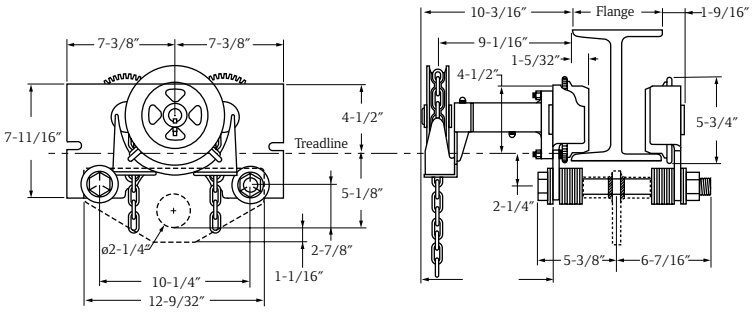

TIR6600 motorized trolley

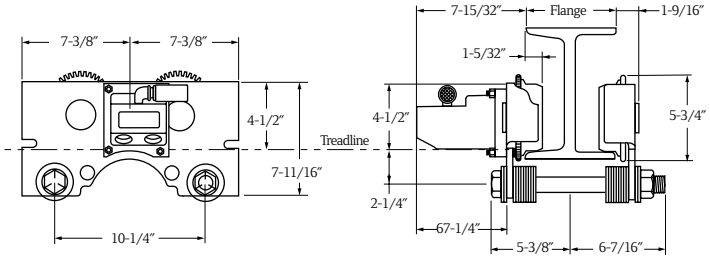

TIR132 plain, geared, and hook-mounted trolley

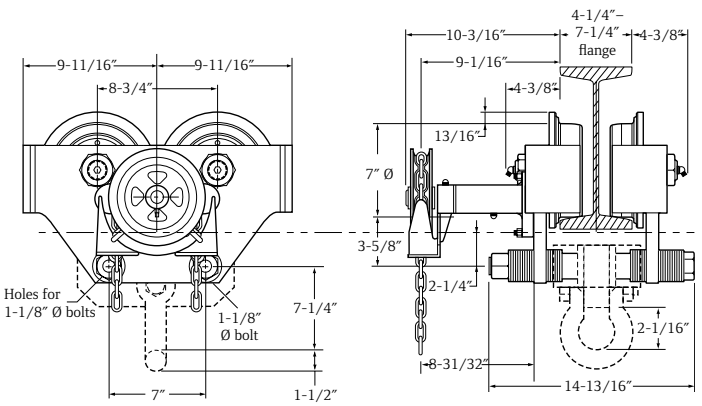

TIR132 motorized trolley

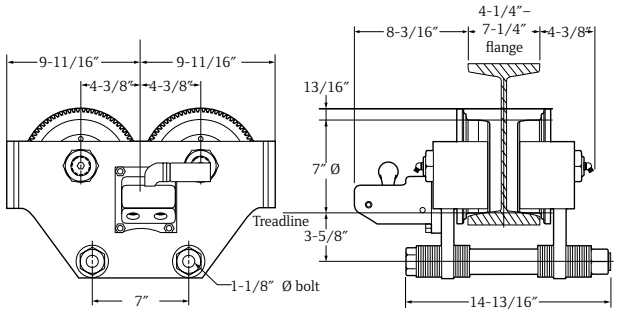

RT010 motorized trolley

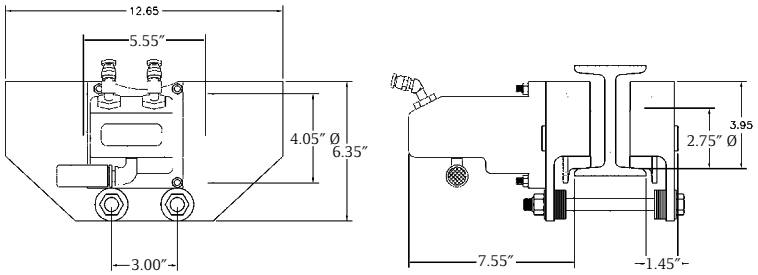

RT Series trolley

1 metric ton capacity

Plain and rigid

Cousin to the PT Series trolley, the twin suspension shaft RT Series trolley offers a rigid connection for the MLK, MLKS, and MLKR Series of air chain hoists. Like the PT Series, the RT Series uses universal tread wheels for use on flat or tapered flange beams.



RT010 Series Trolley Specifications

Trolley Part Number	Capacity metric tons	Fits Beam Flange Width in	Minimum Turning Radius in
RT010	0.25 - 1	2.7 - 6	36

Wheels have universal tread for use on flat or tapered beams.

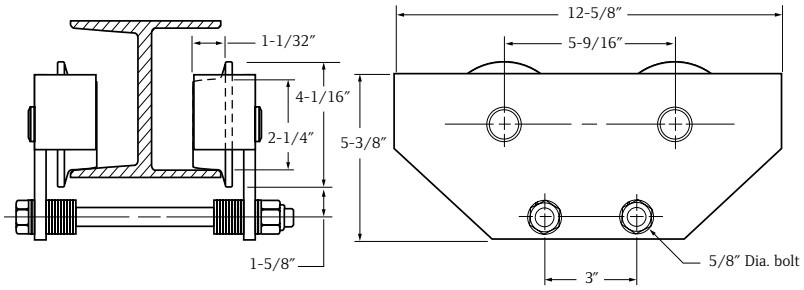

BC Series

1 to 10 metric ton capacities

Beam clamp features

Ingersoll Rand beam clamps provide temporary or permanent mounting options for a wide range of tapered or flat beams. These units have been designed and verified — by actual pull testing — to achieve a minimum design factor of 5:1 for vertical lifting with a powered or manual hoist, which meets ASME B30.16.

These beam clamps offer quick and simple one-handed installation without requiring any tools. Units accommodate hook-mounted hoist or load blocks with minimal loss of headroom. The clamp jaws are designed to reduce beam stress by applying the load inside of the flange edge.

- Quick installation by hand and with no required tools
- Low headroom design adjusts to fit a wide range of flat or tapered beams
- Meets ASME B30.16 for use with powered or manual hoists
- Each unit is serialized and supplied with a test certificate and manual
- Metric rated for vertical lifting at 2,200 lb per ton



BC Series Beam Clamp Specifications and Dimensions

Model	Weight lb	Capacity metric tons	Beam Width A in	B in	C in	D in	E in	F in
BC-1	9.9	1	3 - 10.2	3.1	9.6	4 - 5.9	1.2	0.9
BC-2	11	2	3 - 10.2	3.5	9.6	4. - 5.9	1.2	0.9
BC-3	23.1	3	3.2 - 13.9	4.7	11.2	6 - 8.9	2	0.9
BC-5	24.2	5	3.2 - 13.9	4.9	11.2	6 - 8.9	1.9	1.1
BC-10	35.2	10	3.5 - 14.4	5.7	11.3	6.9 - 9.3	2.2	1.6

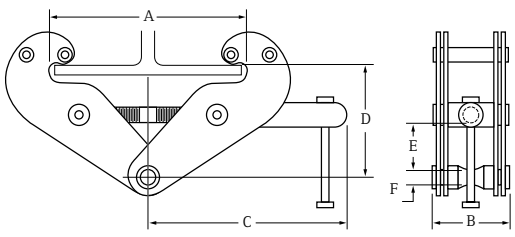

MTK Series

6 metric ton towing capacity

Features

MTK Series tractors require less air, making them less expensive to operate. They're designed for use with any hoist, or even alone to push, pull, or position loads on beams.

- Up to 6 metric ton towing capacity
- Interchangeability with MLK Series and HLK Series parts
- Balanced gear package and air motor provide speeds from slow creep to 165 fpm
- Million-cycle performance tested air motor with spring-loaded vanes provides instant starting and slow speed control
- Heat-treated planetary gearing assures longer life and reduced maintenance
- Self-adjusting, spring-applied, non-asbestos disc brake is air-released for smooth starts and stops
- Drive tire is made from extremely durable polyurethane material with a temperature rating of 185° F for excellent adjustable gripping characteristics
- Tight turning radius of 30″
- Universal solid cast-iron wheels fit both flat and tapered beams
- Wheels can be greased for longer life
- Standard tractor fits 2.7″ – 6.3″ beam flange widths
- Roller guides made from high alloy steel keep tractor running smoothly
- Tractor operates with a full-flow pendent, enhancing load-spotting control
- Standard 7′ pendent length
- Tow bar included with tractor



Options

- Free wheel kit that permits moving of tractor without supplying air; attaches directly to tractor without modification
- Wide flange kit fits 6.27 – 12″ beam flange widths
- Pull chain operation
- Bronze wheels for spark-resistant applications
- Gasket repair and manual brake release kits
- Drawbar hitch kit
- External brake release kit relieves auto disc brake without running tractor

MTK Series Tractor Specifications*

Drawbar Pull lb	Capacity Flat, Dry Good metric tons	Capacity Curved, Slick, Poor metric tons	Max Speed fpm	Pendent Length ft	Turning Radius in	Beam Flange Width Standard in	Beam Flange Width Optional in
0	0	0	165	7	30	2.7 - 6.3	6.3 - 12
100	1.50	0.75	117	7	30	2.7 - 6.3	6.3 - 12
200	3	1.50	86	7	30	2.7 - 6.3	6.3 - 12
300	4.25	2.25	57	7	30	2.7 - 6.3	6.3 - 12
400	6	3	21	7	30	2.7 - 6.3	6.3 - 12

**At 90 psi inlet pressure. Average air consumption is 35 scfm; range is 25 to 45 scfm, depending on load and air pressure.*

Draw Bar Load vs. Tractor Speed

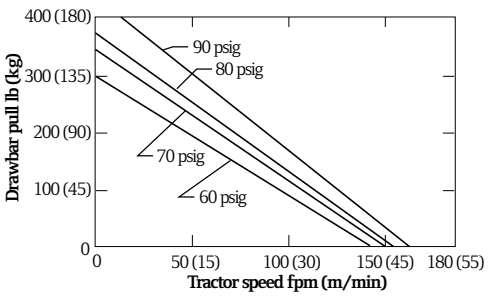

MTK Series

6 metric ton towing capacity

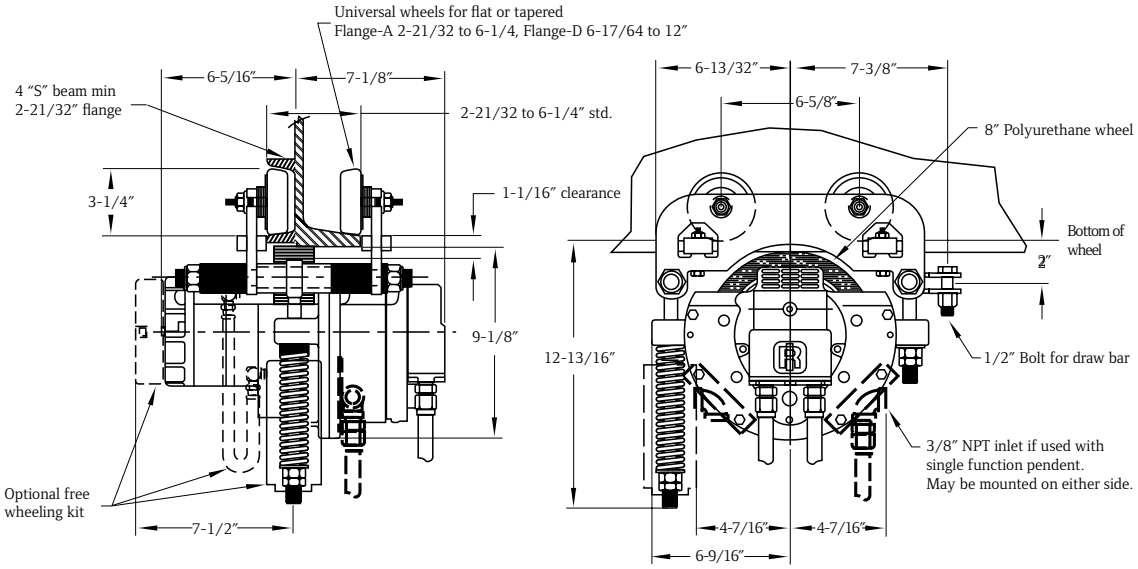

HOW TO ORDER

Specify complete model number as shown. This model code includes: Series, Standard or S*COR*E, type of Trolley, length of chain or pendent drop, flange width, and options Some accessories may be ordered by specifying them as an option code or by ordering separately by part number. See the Accessories and Options charts above.

Example: MTKS-307AM

MTK	S	3	07	A	M
Series	**Standard or S*COR*E**	**Type of control/trolley**	**Chain or pendent length**	**Flange width (in)**	**Options**
MTK	**S** = Standard cast iron wheels	0 = No pendent(1)	**07** = 7 ft (standard)	**A** = Fits 2.66 - 6.25	E = External brake release kit
	B = Standard bronze wheels for S*COR*E features	1 = Pull chain	XX = Specify length in feet	D = Fits 6.26 - 12.00	F = Free wheel
		2 = Single motor pendent(1)	00 = No pendent hose or pull chain		**M** = Manual brake release
		3 = Two motor pendent(2)			P = Piped away exhaust
		4 = Three motor pendent			

(1) Specify when used in combination with hoist on the same order. Specify multiple pendent control function on the hoist only.

(2) Do not specify if tractor is ordered with a hoist.

I-beam specifications

The following table shows the standard size (H) , flange widths (W), and weights for both American, Standard I-beams, and Wide Flange H-beams. I-beams designated with an asterisk (*) denote New Series applications which conform to ASTM A6 standards, effective September 1, 1978.

Wide Flange									American Standard		
H in	W in	Weight per ft lb	H in	W in	Weight per ft lb	H in	W in	Weight per ft lb	H in	W in	Weight per ft lb
6	3.94	8.5	10	10.117	66.0	16*	6.985	36	4	2.663	7.7
6*	4.0	9.0	10*	10.130	68.0	16	7.0	40	4	2.796	9.5
6	4.0	12.0	10	10.170	72.0	16*	6.995	40	5	3.004	10.0
6*	4.0	12.0	10	10.190	77.0	16	7.039	45	5	3.284	14.75
6	4.030	16.0	10*	10.190	77.0	16*	7.035	45	6	3.332	12.5
6*	4.030	16.0	10*	10.625	88.0	16	7.073	50	6	3.565	17.25
6*	5.990	15.0	10	10.275	89.0	16*	7.07	50	7	3.662	15.3
6	5.995	15.5	10	10.340	100.0	16*	7.12	57	7	3.860	20.0
6	6.020	20.0	10*	10.340	100.0	16	8.464	58	8	4.001	18.4
6	6.018	20.0	10	10.415	112.0	16*	10.235	67	8	4.171	23.0
6	6.080	25.0	10*	10.415	112.0	16*	10.295	77	10	4.661	25.4
6*	6.080	25.0	12	3.968	14.0	16*	10.365	89	10	4.944	35.0
8	3.940	10.0	12*	3.970	14.0	16*	10.425	100	12	5.0	31.8
8*	3.940	10.0	12*	3.990	16.0	16	11.502	88	12	5.078	35.0
8	4.0	13.0	12	4.0	16.5	16	11.5	96	12	5.252	40.8
8*	4.0	13.0	12	4.005	19.0	18	6.0	35	12	5,477	50.0
8	4.015	15.0	12*	4.007	19.0	18*	6.0	35	15	5.501	42.9
8*	4.015	15.0	12	4.030	22.0	18	6.015	40	15	5.640	50.0
8	5.250	17.0	12*	4.030	22.0	18*	6.015	40	18	6.001	54.7
8*	5.250	18.0	12*	6.490	26.0	18*	6.060	46	18	6.251	70.0
8	5.268	20.0	12	6.497	27.0	18	7.477	45	20	6.25	65.4
8*	5.270	21.0	12*	6.520	30.0	18	7.5	50	20	6.385	75.0
8	6.495	24.0	12	6.525	31.0	18*	7.5	50	20	7.060	86.0
8*	6.5	24.0	12*	6.560	35.0	18	7.532	55	20	7.200	96.0
8	6.535	28.0	12	6.565	36.0	18*	7.530	55	24	7.001	79.9
8*	6.535	28.0	12	8.0	40.0	18	7.558	60	24	7.125	90.0
8	7.995	31.0	12*	8.005	40.0	18*	7.555	60	24	7.245	100.0
8*	7.995	31.0	12	8.042	45.0	18*	7.635	71	24	7.875	105.9
8	8.020	35.0	12*	8.045	45.0	18	8.715	64	24	8.050	121.0
8*	8.020	35.0	12	8.077	50.0	18	8.75	70			
8	8.070	40.0	12*	8.080	50.0	18	8.787	77			
8*	8.070	40.0	12	10.0	53.0	18*	11.035	76			
8	8.110	48.0	12*	9.995	53.0	18*	11.090	86			
8*	8.110	48.0	12	10.014	58.0	18*	11.145	97			
8	8.220	58.0	12*	10.010	58.0	18*	11.200	106			
8*	8.220	58.0	14	5.0	22.0	18*	11.265	119			
8	8.280	67.0	14*	5.0	22.0	18	11.75	96			
8	8.280	67.0	14	5.025	26.0	21	6.5	44			
10	3.950	11.5	14*	5.025	26.0	21*	6.5	44			
10*	3.960	12.0	14	6.730	30.0	21*	6.530	50			
10	4.0	15.0	14*	6.730	30.0	21*	6.555	57			
10*	4.0	15.0	14	6.75	34.0	21	8.215	55			
10	4.010	17.0	14*	6.745	34.0	21	8.240	62			
10*	4.010	17.0	14	6.770	38.0	21*	8.240	62			
10	4.020	19.0	14*	6.770	38.0	21	8.270	68			
10*	4.020	19.0	14	8.0	43.0	21*	8.270	68			
10	5.75	21.0	14*	7.995	43.0	21	8.295	73			
10*	5.75	22.0	14	8.031	48.0	21	8.295	73			
10	5.762	25.0	14*	8.030	48.0	21*	8.355	83			
10*	5.770	26.0	14	8.062	53.0	21*	8.420	93			
10	5.799	29.0	14*	8.060	53.0	21	8.962	82			
10*	5.810	30.0	14	10.0	61.0	24	7.005	55			
10	7.960	33.0	14*	9.995	61.0	24*	7.005	55			
10*	7.960	33.0	14	10.035	68.0	24*	7.040	62			
10	7.985	39.0	14	10.035	68.0	24	8.961	68			
10*	7.985	39.0	14	10.072	74.0	24*	8.965	68			
10	8.020	45.0	14*	10.070	74.0	24	8.965	76			
10*	8.020	45.0	14	12.0	78.0	24*	8.990	76			
10	10.0	49.0	14	14.5	87.0	24	9.015	84			
10*	10.0	49.0	14*	10.130	82.0	24*	9.020	84			
10	10.030	54.0	16	5.5	26.0	24	9.065	94			
10*	10.030	54.0	16	5.525	31.0	24*	9.065	94			
10	10.080	60.0	16*	5.625	31.0	–	–	–			
10*	10.080	60.0	16	6.692	36.0	–	–	–			

American Standard

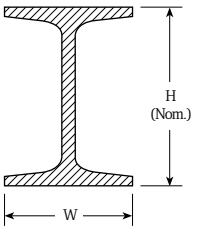

Tapered " S " Beam

Wide Flange

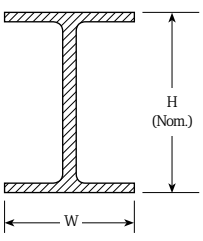

Tapered " S " Beam

Lubricants

These approved lubricants are suggested for either routine preventive maintenance procedures or for total hoist overhaul.

Part No.	Amount	Product Description	Where Used
29665	1 qt (0.9 L)	Detergent-free spindle oil with viscosity of 155-165 S.U.S. at 100*F and aniline point of 217*F.	In airline lubricator to provide lubrication to hoist air motor.
33153	5 lb (2.3 kg)	EP (extreme pressure) bearing and gear grease, NLGI No. 1 with viscosity of 750 S.U.S. at 100*F.	Pocket wheel, sheave block
50P	1 pt (0.5 L)	Class II lubricant, #50	Hoist and winches
40164	1 qt (0.9 L)	Gear oil	Hoist gearing
50G	1 gal (3.8 L)	Class II lubricant, #50	Hoist and winches
62 1 Gal	1 gal (3.8 L)	Class II #62 oil	Hoist and winch gear boxes
36460	4 oz (118 ml)	Stringy lubricant for rubber seals Triple protection, USDA approved lubricant Extreme pressure formula and corrosion inhibitors, penetrating oils.	"O" rings Load chain or wherever penetrating lubricating oils are used
Lubri-Link Green	16 oz spray bottle	Stringy lubricant for rubber seals Triple protection, USDA approved lubricant Extreme pressure formula and corrosion inhibitors, penetrating oils.	"O" rings Load chain or wherever penetrating lubricating oils are used
LLG-5	5 gal bulk container	Stringy lubricant for rubber seals Triple protection, USDA approved lubricant Extreme pressure formula and corrosion inhibitors, penetrating oils.	"O" rings Load chain or wherever penetrating lubricating oils are used



29665



33153



40164



36460



Lubri-Link Green

Filters - Regulators - Lubricators

Part No.	Size (in) NPTF	Flow Rate scfm	Adj. Pressure Range psig	Bowl Capacity	Height x Width (in)
TRIO UNITS: FILTERS, REGULATORS, LUBRICATORS					
C38341-810	1/2	150	5-250	4 oz	6 x 8.7
C38451-810	3/4	200	5-250	4 oz	8.6 x 11.1
C38461-810	1	215	5-250	4 oz	8.6 x 11.1
Part No.		COMPONENTS			
TRIO #		FILTER	REGULATOR	LUBRICATOR	
C38341-810	1/2	F35341-410	R37341-600	L36341-110	
C38451-810	3/4	F35451-410	R37451-600	L36451-110	
C38461-810	1	F35461-410	R37461-600	L36461-110	



C38451-810



C38341-810

Material Handling Solutions

Case study

Ingersoll Rand routinely provides custom solutions for lifting and pulling applications all over the world. Please contact an authorized Ingersoll Rand distributor or representative for assistance with your application's requirements.



Model

HL2000K/04014E

Application

Nuclear weapon handling hoist and motorized trolley system

Solution

Customer required hoists to be built to ASME NUM-1, *Rules for Construction of Cranes, Monorails, and Hoists,* a design standard for hoists and cranes used in nuclear facilities. Hoists are to be used for the assembly and maintenance of nuclear weapons.

Product Specifications

Model	Capacity	Design Factor	Headroom	Lifting and Lowering Speed	Trolley Travel Speed
HL2000K/04014E	2,000 lb (909 kg)	10:1	22 in (558.8 mm) maximum	Not to exceed 10 fpm (3 m/min)	Not to exceed 16 fpm (4.9 m/min)

Options

- Special quick disconnect pendent manifold
- Positive sealed motor and gearbox — zero tolerance for leakage for "clean room" environment
- Pendent designed to survive a 150 psi overpressure condition
- Custom chain container with drain plug
- Unpainted bare steel bottom hook
- Overload limiter on hoist
- Ecology air preparation package for hoist and trolley
- Custom operation and maintenance manuals and special documentation
- Special customer defined NDE, sound, and load testing requirements
- Long-term storage packaging requirements
- Lightning arrest modifications



HLK2000K/04014E

Notes

Limited Warranty

Industrial Lifting Equipment Limited Warranty

Ingersoll Rand Company (IR) warrants to the original user its industrial lifting equipment (Hoists) to be free of defects in material and workmanship for a period one year from the date of purchase. Ingersoll Rand will repair, without cost, any Hoist found to be defective, including parts and labor charges, or at its option, will replace such Hoist or refund the purchase price less a reasonable allowance for depreciation, in exchange for the hoist. Repairs or replacements are warranted for the remainder of the original warranty period.

If any Hoist proves defective within its original one year warranty period, it should be returned to an appropriate Ingersoll Rand Service Distributor, transportation prepaid with proof of purchase or warranty card.

This warranty does not apply to Hoist that Ingersoll Rand has determined to have been misused or abused, improperly maintained by the purchaser, or where the malfunction or defect can be attributed to the use of non-genuine Ingersoll Rand parts.

Ingersoll Rand makes no other warranty, and all implied warranties including any warranty of merchantability or fitness for a particular purpose are limited to the duration of the expressed warranty period as set for the above. Ingersoll Rand's maximum liability is limited to the purchase price of the Hoist and in no event shall Ingersoll Rand be liable for any consequential, indirect, or special damages of any nature arising from the sale or use of the Hoist, whether based on contract, tort, or otherwise.

Note: Some states do not allow limitations on incidental or consequential damages so that the above limitations may not apply to you. This warranty gives you specific legal rights and you may also have other rights that may vary from state to state.

Product, Parts, Maintenance, Operation, and Safety manuals can be downloaded from irtechpubs.com

Ingersoll Rand (NYSE:IR) advances the quality of life by creating and sustaining safe, comfortable and efficient environments. Our people and our family of brands—including Club Car®, Ingersoll Rand®, Schlage®, Thermo King® and Trane® —work together to enhance the quality and comfort of air in homes and buildings; transport and protect food and perishables; secure homes and commercial properties; and increase industrial productivity and efficiency. Ingersoll Rand products range from complete compressed air systems, tools and pumps to material handling systems. The diverse and innovative products, services and solutions enhance our customers' energy efficiency, productivity and operations. We are a $14 billion global business committed to a world of sustainable progress and enduring results. For more information, visit ingersollrand.com.

www.ingersollrandproducts.com

Distributed by:

Ingersoll Rand, IR and the IR logo are trademarks of Ingersoll Rand, its subsidiaries and/or affiliates. All other trademarks are the property of their respective owners.

WARNING: This equipment is not designed for transporting people or lifting loads above people. It is the user's responsibility to determine the suitability of this product for any particular use and to check compliance with applicable regulations. Before installation, see maintenance and operations manual for additional warnings and precautions

Nothing contained on these pages is intended to extend any warranty or representation, expressed or implied, regarding the product described herein. Any such warranties or other terms and conditions of sale of products shall be in accordance with Ingersoll Rand's standard terms and conditions of sale for such products, which are available upon request.

Product improvement is a continuing goal at Ingersoll Rand. Designs and specifications are subject to change without notice or obligation.

We are committed to using environmentally conscious print practices.

© 2013 Ingersoll Rand IRITS-0709-066 / 05132013